higher education & training

Department:
Higher Education and Training
REPUBLIC OF SOUTH AFRICA

NATIONAL CERTIFICATE

DIESEL TRADE THEORY N3

(11041823)

4 December 2023 (X-paper)
09:00–12:00

This question paper consists of 8 pages.

245Q1G2304

Copyright reserved

DEPARTMENT OF HIGHER EDUCATION AND TRAINING
REPUBLIC OF SOUTH AFRICA

NATIONAL CERTIFICATE
DIESEL TRADE THEORY N3
TIME: 3 HOURS
MARKS: 100

INSTRUCTIONS AND INFORMATION

1. Answer ALL the questions.
2. Read ALL the questions carefully.
3. Number the answers according to the numbering system used in this question paper.
4. Use only a black or blue pen.
5. Write neatly and legibly.

Copyright reserved

SECTION A

QUESTION 1

Various options are given as possible answers to the following questions. Choose the correct answer and write only the letter (A–D) next to the question number (1.1–1.10) in the ANSWER BOOK.

1.1 Both valves are open between … strokes.

A inlet and exhaust
B compression and power
C power and exhaust
D compression and inlet

1.2 The function of the flywheel is to …

A help with hard starting.
B store the energy.
C reduce engine momentum.
D drive the pistons

1.3 The thermal efficiency of an engine occurs during … stroke.

A inlet
B compression
C power
D exhaust

1.4 The ratio of indicated thermal efficiency to the corresponding air standard cycle efficiency is called …

A net efficiency.
B efficiency ratio.
C relative efficiency.
D overall efficiency.

1.5 The importance of the tappet rotation is …

A to prevent carbon build up.
B to provide a tight seal.
C to provide valve intrusion.
D to provide valve protrusion.

Copyright reserved

1.6 The importance of correct valve clearance is to …

A keep the valve open.
B ensure that valve seat properly.
C keep the valve close for a long period.
D allow for expansion.

1.7 The distance of the throw of a crankshaft is measured from the …

A diameter of the big end journal and the diameter main journal
B radius of the big end journal to the radius main journal.
C centre of the big end journal to the centre of the piston
D centre of the main bearing journal to the centre of the piston

1.8 The rotational speed of the flywheel is …

A the same as the crankshaft
B the same as fuel pump
C twice the speed of the rocker shaft gear
D same as the camshaft

1.9 The maximum temperature in the IC engine cylinder is of the order of

A 500–1 000 °C
B 1 000–1 500 °C
C 1 500–2 000 °C
D 2 000–2 500 °C

1.10 Exhaust valve lag occurs when …

A the valve opens before the piston reaches BDC.
B the valve close after piston reaches TDC.
C both valves are open at the same time.
D both valves are closes at the same time.

(10 × 1) **[10]**

QUESTION 2

Indicate whether the following statements are TRUE or FALSE by writing only 'True' or 'False' next to the question number (2.1–2.5) in the ANSWER BOOK.

2.1 Petrol engines diesel engines work on the otto cycle and diesel cycle, respectively.

2.2 Intake stroke occurs when spent gases are expelled from the combustion chamber and released to the atmosphere.

2.3 During the exhaust stroke power is transferred from the piston to the crankshaft.

2.4 The advantage of the petrol engine is that its lifespan is almost always shorter than that of the diesel engine.

Copyright reserved

2.5 Diesel engine ignition is achieved with the help of the hot, compressed air. (5)

(5 × 1) **[5]**

QUESTION 3

Choose a term from COLUMN B that matches a description in COLUMN A. Write only the letter (A–L) next to the question number (3.1–3.10) in the ANSWER BOOK.

COLUMN A		COLUMN B	
3.1	Consist of an impeller, turbine and stator	A	compression rings
3.2	Ignites by means of the spark plug	B	CI engine
3.3	Change direction of oil leaving the impeller	C	return spring
3.4	Helps with cold starting	D	cam lobe
3.5	Open the exhaust valve	E	chronological filing
3.6	Grouping according to the date of service	F	stator
3.7	Consist only of an impeller and turbine	G	torque convertor
3.8	Closes the inlet valve	H	fluid drive
3.9	Prevent the engine from over accelerating	I	governor
3.10	Transfer heat from the piston to the cylinders	J	ignition delay
		K	SI engine
		L	glow plug

(10 × 1) **[10]**

QUESTION 4

4.1 Mention FOUR advantages of fluid clutches over friction clutches (4)

4.2 Which fluid medium is used in the operation of a fluid clutch? (1)

[5]

TOTAL SECTION A: 30

SECTION B

QUESTION 5

5.1 Define the following terms:

5.1.1 Exhaust valve lag

5.1.2 Volumetric efficiency

5.1.3 Pre - ignition

5.1.4 Phasing

5.1.5 Inlet valve lag

(5 × 2) (10)

5.2 List THREE elements of a torque convertor (3)

5.3 State TWO advantages of an automatic transmission (2)

[15]

QUESTION 6

6.1 The sketch below shows a sectioned view of a power-steering unit.

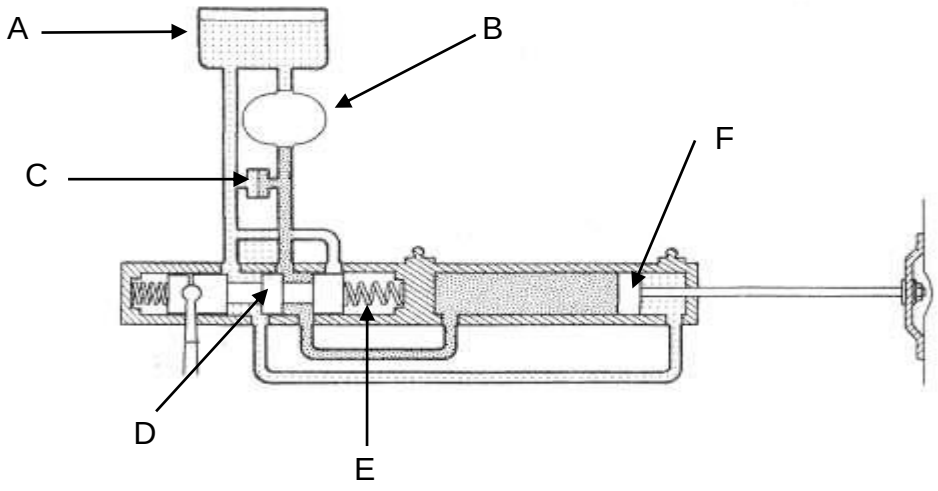

6.1.1 Name the labelled components in the sketch above by writing the answer next to the letter (A–F) in the ANSWER BOOK. (6)

6.1.2 Explain the operation of the power-steering unit when the vehicle is steered to the left. (6)

6.1.3 Mention FIVE advantages of epicyclic gearing over conventional gearing. (5)

6.2 Name TWO duties of a receptionist. (2)

6.3 Briefly explain the following:

6.3.1 Time factor.

6.3.2 Skill factor.

6.3.3 Price factor. (3 × 2) (6)

[20]

TOTAL SECTION B: 40

SECTION C

QUESTION 7

7.1 Mention EIGHT advantages of using computers in the car dealerships. (8)

7.2 State EIGHT important factors that one needs to consider when selecting a site to set up a service station. (8)

7.3 Give TWO disadvantages of numerical filing. (2)

7.4 Calculate the values numbers 7.4.1 to 7.4.6 for the ASE and the C R in the table below by using the following formula: (6)

$$N=1-(1/R)^{0,4}$$

N	**7.4.1**	**7.4.2**	**7.4.3**	72%	76%	78%
R	16:1	19:1	10:1	**7.4.4**	**7.4.5**	**7.4.6**

7.5 The stroke length of a diesel engine is 105 mm and the piston diameter is 85 mm. The clearance volume is 9 500 mm^3. Use the following formulae to calculate the following:

$$C\,R = \frac{Vs + Vc}{Vc} \quad ; \quad Vs = \left[\frac{\pi D^2}{4}\right] \times Ls$$

7.5.1 C R

7.5.2 Swept Volume

(2 × 3) (6)

TOTAL SECTION C: 30

GRAND TOTAL: 100

Copyright reserved