higher education & training

Department:
Higher Education and Training
REPUBLIC OF SOUTH AFRICA

NATIONAL CERTIFICATE

BUILDING DRAWING N3

(8090023)

30 November 2023 (X-paper)
09:00–13:00

REQUIREMENTS: **A2 drawing paper**
Drawing instruments and a non-programmable calculator may be used.

This question paper consists of 7 pages.

165Q1E2330

Copyright reserved

DEPARTMENT OF HIGHER EDUCATION AND TRAINING
REPUBLIC OF SOUTH AFRICA

NATIONAL CERTIFICATE
BUILDING DRAWING N3
TIME: 4 HOURS
MARKS: 100

INSTRUCTIONS AND INFORMATION

1. Answer all the questions.
2. Read all the questions carefully.
3. Number the answers according to the numbering system used in this question paper.
4. All drawings, including candidate's information must be done in pencil.
5. All labelling must be written in capital letters.
6. Provide an appropriate title and scale for all drawings.
7. A balanced layout must be maintained.
8. Discretion must be used for dimensions not given.
9. All drawing work, abbreviations and symbols must comply with the latest National Building Regulations and all relevant SANS (SABS) codes.
10. Write neatly and legibly.

Copyright reserved

QUESTION 1: FLOORS

Draw, to scale 1:10, the vertical section through a concrete floor with bearers and floor boards. The wall is one-brick thick from the foundation and plastered on both sides. Hard core supports the concrete floor, which is finished off with bearers and tongue & groove flooring. The bearers are held in position by floor clips.

SPECIFICATIONS:

- Strip foundation : 660 mm × 220 mm
- Hard core : 150 mm
- Ground level : 150 mm above concrete foundation
- Concrete floor : 75 mm
- Horizontal DPC : 450 mm above the top of the foundation
- Bearers : 50 mm × 50 mm at 400 mm c/c
- Floor clip : 400 mm c/c
- Floor boards : 100 mm × 22 mm T & G boards
- Skirting : 75 mm × 12 mm Meranti
- Plaster : 19 mm both sides **[20]**

QUESTION 2: STONE DRESSING TO OPENING

Draw, to scale 1:10, the front elevation of a flat arch with stepped and bonded extrados. The drawing must include the keystone, with bevelled corner stone and bevelled voussoirs, the construction lines to show how you obtained the slant of the voussoirs and the TWO stones below the bevel. This flat arch is at the top of the opening of the building that is surrounded by masonry on either side.

SPECIFICATIONS:

- Arch height : 600 mm
- Span : 900 mm
- Stone slant : 60^0
- Camber : 10 mm
- Stone steps : 150 mm
- Corner stone : 300 mm × 150 mm
- Key stone : 600 mm × 550 mm × 250mm
- Side stone 150 mm × 150mm
- Side stone : 300 mm × 150 mm **[15]**

Copyright reserved

QUESTION 3: ROOF

Draw, to scale 1:10, a vertical section through flush roof eaves with fibre cement slates, up to seven battens. Show the part of the external wall built in cavity, plastered internally and part of the ceiling up to the second batten. Rain water goods to be included with no overhang. Rafter and tie beam to be joined with gang nails.

SPECIFICATIONS:

- Tie beam : 114 mm × 38 mm
- Rafter at 30° : 114 mm × 38 mm
- Gang nail plate : SABS approved
- Battens : 38 mm × 38 mm at 146 c/c
- Fibre cement slates : 406 mm × 305 mm × 4,25 mm
- Underlay : 230 micron
- Brandering : 38 mm × 38 mm at 400 mm c/c
- Ceiling : 10 mm Rhino board
- Wall plate : 114 mm × 38 mm
- Plaster : 19 mm
- Wall : 270 cavity
- Tilting batten : 50 mm × 50 mm
- Gutter : 100 mm half-round
- Fascia board : 220 mm × 22 mm
- Down pipe : 75 mm
- Cornice : 75 mm cove

[20]

Copyright reserved

QUESTION 4: REINFORCEMENT

The diagram below shows the vertical section of a reinforced concrete beam and slab. Label the different parts of the reinforcing steel bars as indicated.

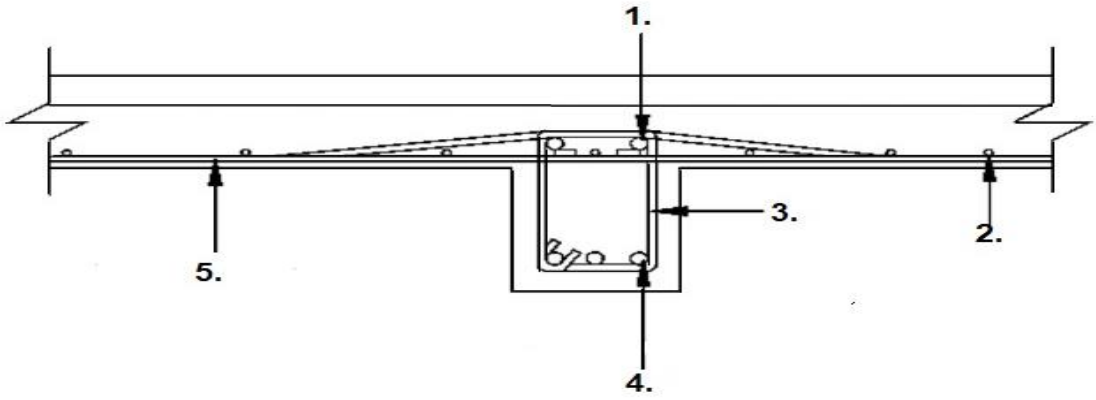

[5]

QUESTION 5: JOINERY

Draw, to scale 1:20, the plan view of a staircase with a half-space landing, built against the external wall of a room. Show the handrail and the newel post in the drawing and also the external wall and the landing. Show seven steps for the lower flight and six steps for the upper flight.

SPECIFICATIONS:

- Upper flight : 900 mm wide
- Lower flight : 900 mm wide
- Tread : 230 mm
- Landing : 900 mm × 1800 mm
- External wall : 220 mm
- Hand rail and newel post : Own design

[10]

QUESTION 6: PLUMBING

Draw, not to scale, but in good proportion, a vertical section of a bidet and show the different parts. The height should be 395 mm precisely.

SPECIFICATIONS:

- Flushing rim
- Trap
- Overflow
- Ascending spray
- Pop-up waste
- Waste fitting
- Water inlet

[10]

QUESTION 7: DOOR JAMB

Draw, to scale 1:2, a horizontal section of a steel door jamb in a one-brick wall, plastered on both sides.

SPECIFICATION:

- Wall : 220 mm
- Plaster : 19 mm
- Door : 44 mm
- Frame : Single rebated steel door jamb
- Fixing lug : Good proportion

[10]

Copyright reserved

QUESTION 8: THEORY

For one to be competent in the construction field, it is important to familiarise oneself with the terminology used. Indicate whether the following terms are TRUE or FALSE by writing only 'True' or 'False' next to the number (8.1–8.10) in the ANSWER BOOK.

8.1 The reveal is the area of walling at the side of the opening which is at right angles to the general face of the wall.

8.2 A weep hole is an opening placed in mortar joints of facing materials at the level of the flashing to permit the escape of moisture.

8.3 Lime stains can be regarded as bleed or bloom.

8.4 Frost damage is the action of freezing water and the thawing ice in saturated materials.

8.5 Waste water means non-excremental liquid discharge from waste water fitments.

8.6 Durability of material is the inability of material to withstand the potentially destructive action of natural conditions and chemical reactions.

8.7 Perpends are horizontal lines controlling the verticality of cross joints appearing on the face wall.

8.8 Waterproofing is the prevention of moisture flow through masonry.

8.9 Reinforcement is metal built into the brickwork.

8.10 The initial set is the first setting of mortar, the beginning of the set.

(10 × 1) **[10]**

TOTAL: 100

Copyright reserved