higher education & training

Department:
Higher Education and Training
REPUBLIC OF SOUTH AFRICA

NATIONAL CERTIFICATE

BUILDING AND CIVIL TECHNOLOGY N3

(11010273)

25 November 2022 (X-paper)
09:00–12:00

Drawing instruments and nonprogrammable calculators may be used.

This question paper consists of 6 pages.

235Q1E2225

Copyright reserved

DEPARTMENT OF HIGHER EDUCATION AND TRAINING
REPUBLIC OF SOUTH AFRICA

NATIONAL CERTIFICATE
BUILDING AND CIVIL TECHNOLOGY N3
TIME: 3 HOURS
MARKS: 100

INSTRUCTIONS AND INFORMATION

1. Answer all the questions.
2. Read all the questions carefully.
3. Number the answers according to the numbering system used in this question paper.
4. Start each section on a new page.
5. Use only a blue or black pen.
6. Write neatly and legibly.

Copyright reserved

QUESTION 1

1.1 Indicate whether the following statements are TRUE or FALSE. Choose the answer and write only 'True' or 'False' next to the question number (1.1.1–1.1.10) in the ANSWER BOOK.

1.1.1 Dismissal means an employer has terminated a contract of employment with or without notice.

1.1.2 The architect must prepare drawings and calculate costs which are in line with what the owner is prepared to pay.

1.1.3 Dismissal means an employer terminated a contract of employment with or without notice because the employer made continued employment intolerable for the employee.

1.1.4 The clerk of works checks the quality of the workmanship on the job.

1.1.5 The site supervisor ensures that a slow rate of progress is maintained to ensure quality.

1.1.6 The primary function of planning in the building industry is to make the most efficient and economical use of labour, machines, materials, and methods.

1.1.7 A leader should have the ability to demonstrate how work should be done in a construction.

1.1.8 It is the responsibility of the owner to take over the payment of insurance policies from the contractor, which is necessary for the safety and keep of the completed building.

1.1.9 A plasterer takes samples and tests cubes as directed.

1.1.10 A glazier checks that glass has been properly back puttied and cleaned.

(10 × 1) (10)

1.2 Give SIX functions and responsibilities of a building construction contractor. (6)

[16]

QUESTION 2

2.1 Name FOUR types of foundations. (4)

2.2 State FOUR procedures that have to be performed before any underpinning may be carried out. (4)

2.3 Illustrate, with the aid of a sketch, a pipe level (U-tube). (6)

2.4 Define the term *scaffolding*. (2)

[16]

Copyright reserved

QUESTION 3

3.1 Curing is an important operation for fresh concrete. Name FOUR ways of curing. (4)

3.2 Briefly explain the difference between the following:

3.2.1 Cube testing

3.2.2 Slump testing

(2 × 2) (4)

3.3 Slump tests are useful on sites where quick tests are made. Draw a neat, free-hand sketch of a slump test, and label any TWO parts that you know. (5)

3.4 Find the total amount of water required for a complete mix which contains 600 kg of cement with a water/cement ratio of 0,60. (3)

[16]

QUESTION 4

4.1 Identify each item indicated by the following abbreviations used in plumbing:

4.1.1 BT

4.1.2 RE

4.1.3 CL

4.1.4 FI

4.1.5 CE

(5 × 1) (5)

4.2 Give the names of the marked parts in the sketch below. Write only the correct answer next to the number (1–5) in the ANSWER BOOK.

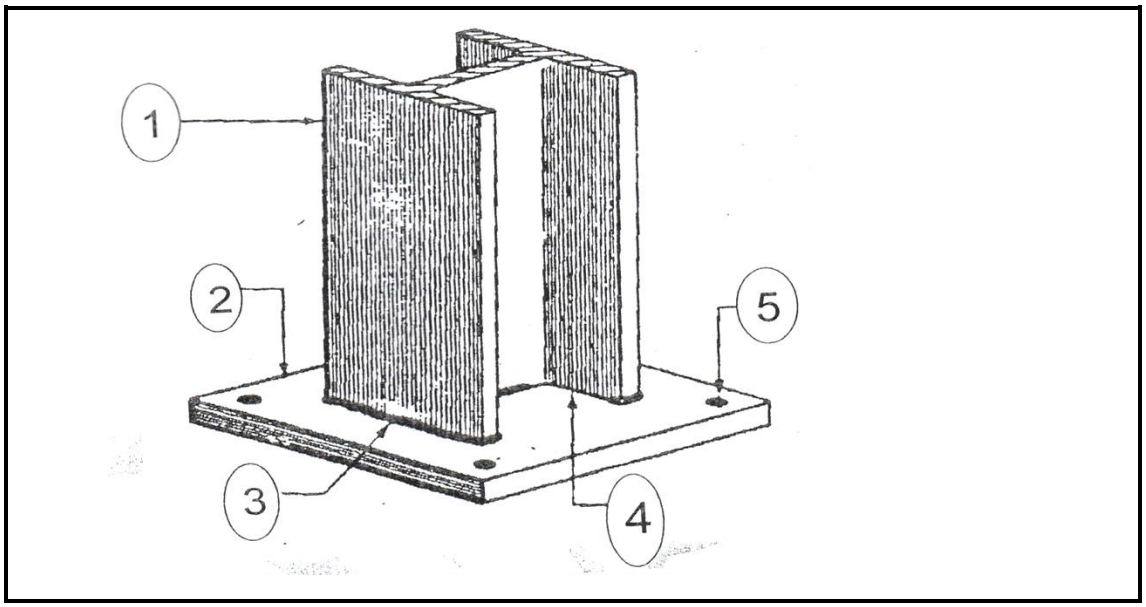

(5 × 1) (5)

4.3 State FOUR disadvantages of knots in timber. (4)

4.4 Briefly describe the difference between:

4.4.1 V5

4.4.2 M5

(2 × 1) (2)
[16]

QUESTION 5

5.1 Explain the following failures in roadworks:

5.1.1 Crocodile cracks

5.1.2 Edge cracks

5.1.3 Joint cracks

(3 × 2) (6)

5.2 What does *edging* mean in building construction? (2)

5.3 Name and explain FOUR factors which should be considered and weighed up when selecting a floor finishing. (8)
[16]

QUESTION 6

6.1 Name THREE types of kerbing. (3)

6.2 What causes potholes on the road? (1)

6.3 Calculate the following:

6.3.1 The square area if given 9 000 bricks (bricks in 1 m^2 of one-brick walling = 100).

6.3.2 The total labour cost if the cost of labour is R250/m^2.

(2 × 2) (4)

6.4 Calculate the following:

6.4.1 The number of bricks required

6.4.2 The amount of sand required

(2 × 2) (4)

NOTE

- Length of wall =150m
- Height of wall = 1m
- 1 000 kg = 1 ton
- Bricks in 1 m^2 of one-brick walling = 100

6.5 A foundation of 8 m long by 600 mm wide and 250 mm thick must be cast.

Calculate the amount of concrete required and the total cost of the concrete if the concrete cost is R450/m^3. (4)

6.6 The sketch below shows a section through the side of the road displaying the different parts. Identify the different parts numbered from 1 to 4 by only writing the answer next to the number (1–4) in the ANSWER BOOK.

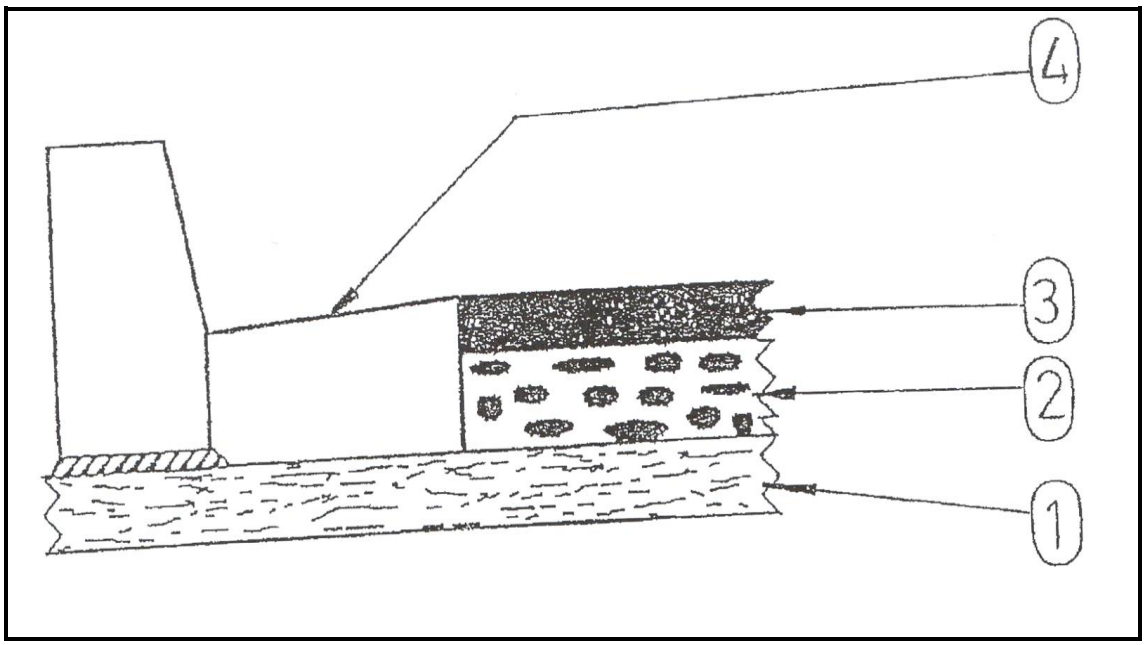

(4)
[20]

TOTAL: 100

Copyright reserved