higher education & training

Department:
Higher Education and Training
REPUBLIC OF SOUTH AFRICA

# MARKING GUIDELINE

## NATIONAL CERTIFICATE

## BUILDING SCIENCE N3

**17 November 2022**

**This marking guideline consists of 8 pages.**

Copyright reserved

## QUESTION 1

1.1 Blistering forms when water vapour is trapped under the paint.✓✓

1.2 Colour stains happens if an incorrect paint is applied over another.✓✓

1.3 Peeling paint occurs because paint is applied over dirt, grease or loose paint, or because the substrate contained moisture.✓✓

1.4 Unsightly wrinkling occurs when paint is applied too thickly.✓✓

1.5 Chalking occurs when the paint surface has disintegrated and the binder has lost its power allowing the pigment to be rubbed off like chalk.✓✓

(Any relevant answer) (Any 5 × 2) **[10]**

## QUESTION 2

2.1 Taking moments about $R_A$

$7R_F = (3 \times 1) + (6 \times 3) + (5 \times 4) + (1 \times 5)$ ½✓ (1½)

$R_F = 6.57$ kN✓

Taking moments about $R_F$ (1½)

$7R_A = (1 \times 2) + (5 \times 3) + (6 \times 4) + (3 \times 6)$ ½✓

$R_A = 8.43$ kN✓

2.2 SHEAR FORCE DIAGRAM

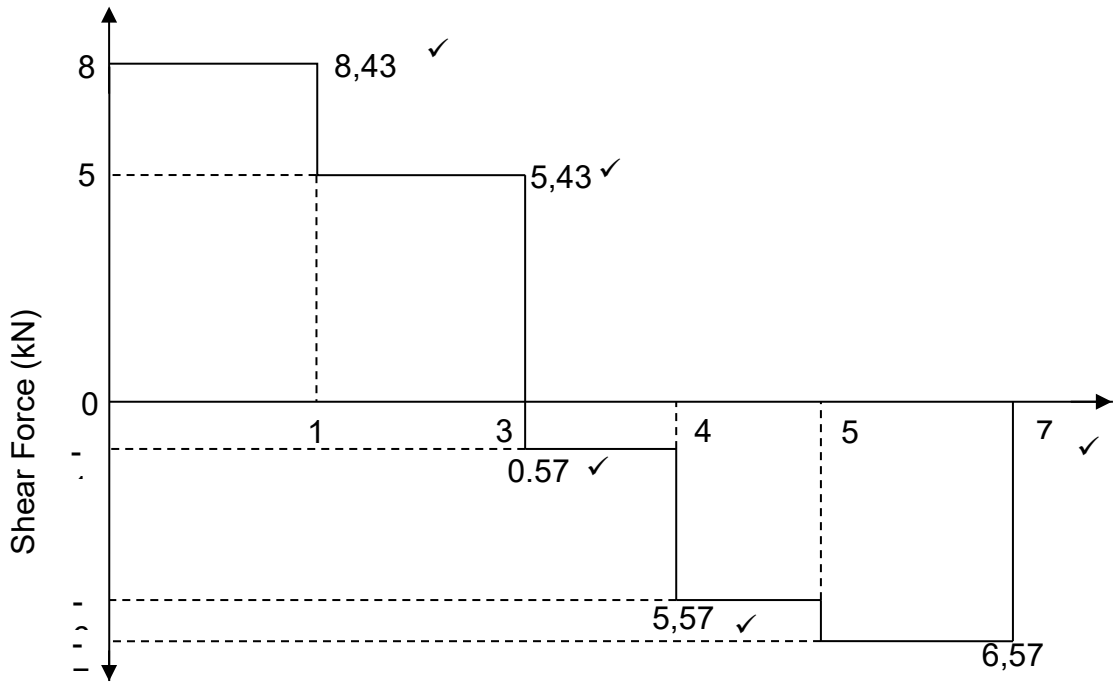


(6)

**ANSWERS HAVE BEEN ROUNDED OFF FOR DRAWING PURPOSE**

2.3 BENDING MOMENT DIAGRAM

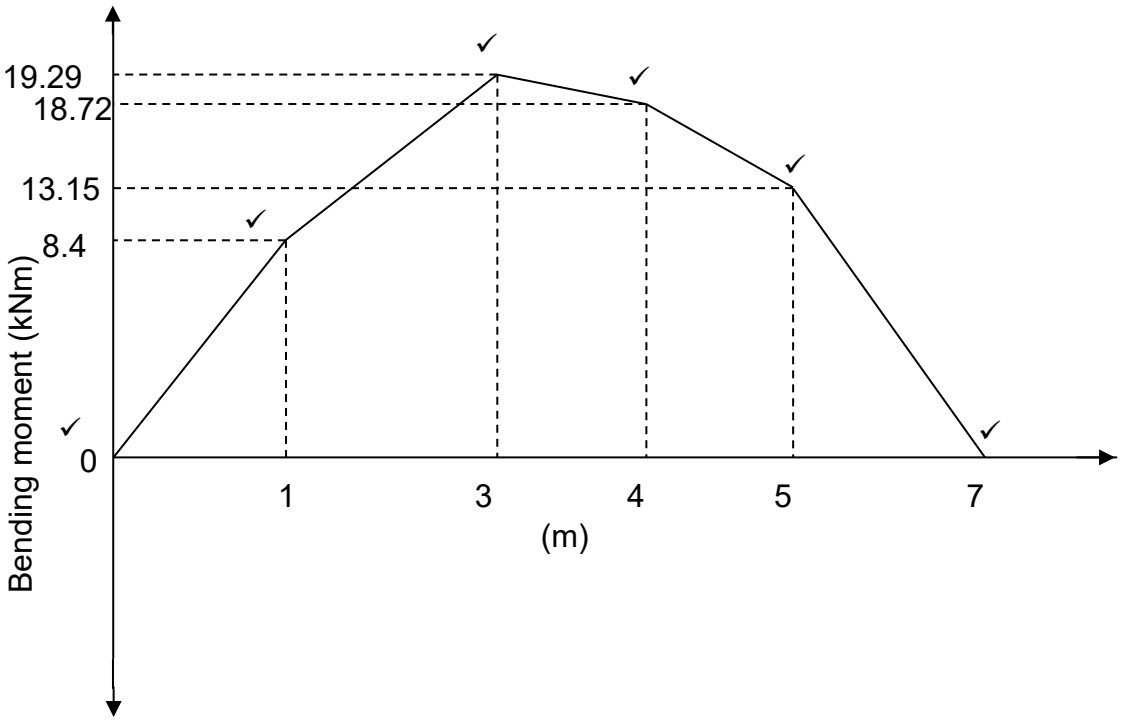


(6)
**[15]**

## QUESTION 3

3.1 Perpendicular component = W Cosθ
= 30 × 9.81✓ × Cos28°✓
= 259.85 N✓

3.2 $F_\mu = \mu W \cos\theta$
= 0.7 × 259.85✓
= 181.90 N✓✓

3.3 Parallel component = W Sinθ
= 30 × 9.81✓ × Sin28° ✓
= 138.17 N✓

3.4 $F_{down} = \mu W \cos\theta - W \sin\theta$✓
= 181.90 – 138.17✓
= 43.73 N✓

3.5 $F_{up} = \mu W \cos\theta + W \sin\theta$✓
= 181.90 + 138.17✓
= 320.07 N✓

(5 × 3) **[15]**

## QUESTION 4

4.1

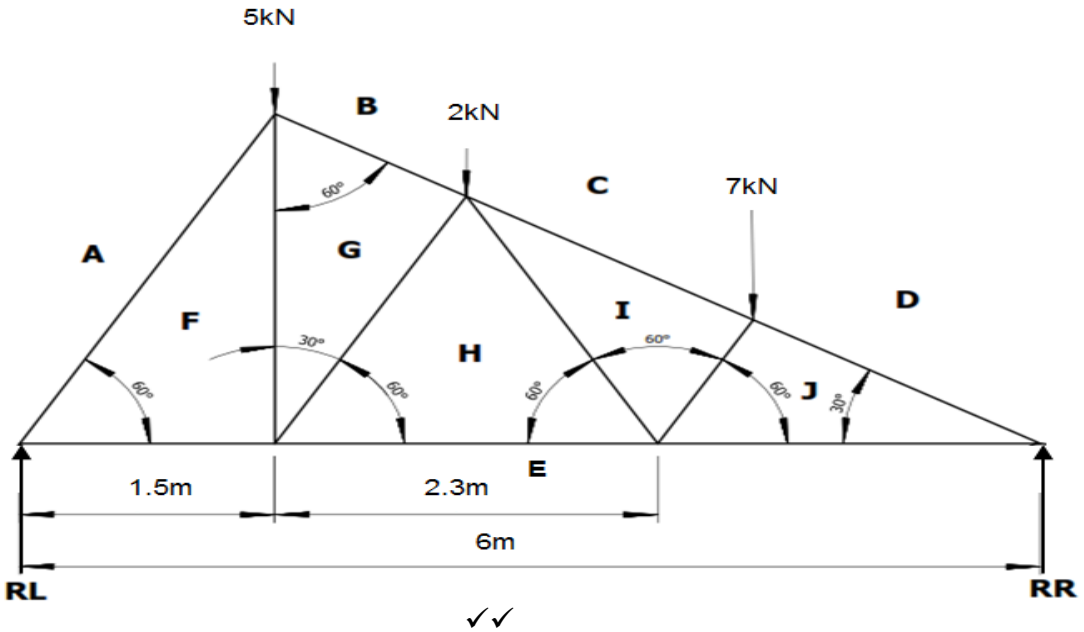


✓✓ (2)

Copyright reserved

4.2.1 Taking moments about the RL

CWM = ACWM

(5 × 1.5) + (2 × 2.65) + (7 × 4.4) = (RR × 6)✓

RR = 7.27 kN✓ (2)

4.2.1 Taking moments about RR

CWM = ACWM

(RL × 6) = (7 × 1.6) + (2 × 3.35) + (5 × 4.5)✓

RL = 6.73 kN✓ (2)

4.3 **FORCE DIAGRAM**
**SCALE 1 cm:1 kN**

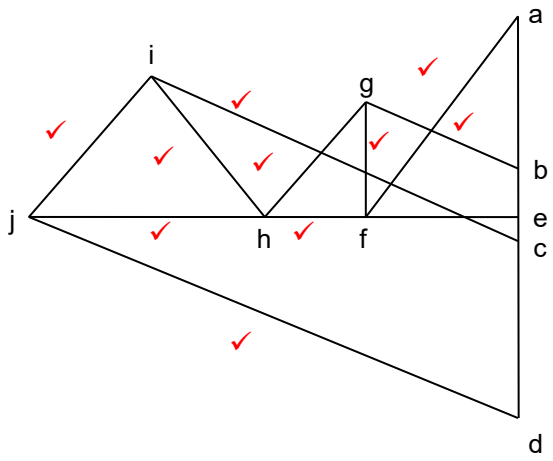


(10x½)

| MEMBER | MAGNITUDE (kN) | NATURE |
|---|---|---|
| AF | 7.8 ✓½ | STRUT ✓½ |
| FG | 4.0 ✓½ | TIE ✓½ |
| BG | 4.5 ✓½ | STRUT ✓½ |
| GH | 4.7 ✓½ | STRUT ✓½ |
| EF | 3.9 ✓½ | TIE ✓½ |
| CI | 10.4 ✓½ | STRUT ✓½ |
| HI | 5.7 ✓½ | TIE ✓½ |
| EH | 6.2 ✓½ | TIE ✓½ |
| IJ | 5.8 ✓½ | STRUT ✓½ |
| DJ | 13.8 ✓½ | STRUT ✓½ |
| EJ | 11.9 ✓½ | TIE ✓½ |

(Any correct 9)

(18x½)
**[20]**

**QUESTION 5**

| SHAPE | AREA ($mm^2$) | X (mm) | Y (mm) | AX ($mm^3$) | AY ($mm^3$) | Marks |
|---|---|---|---|---|---|---|
| (A) | 50 × 80 = 4000 ½ ✓ | 25 ½✓ | 40 ½✓ | 100 000 ½✓ | 160 000 ½✓ | (2 ½) |
| (B) | 30 × 20 = -600 ½✓ | 25 ½✓ | 20 ½✓ | -15 000 ½✓ | -12 000 ½✓ | (2 ½) |
| (C) | ½ × 30 × 40 = 600 ½✓ | 60 ½✓ | 53.33 ½✓ | 36 000 ½ ✓ | 31998 ½✓ | (2 ½) |
| (D) | 60x40 = 2400 ½✓ | 80 ½✓ | 20 ½✓ | 192 000 ½✓ | 48 000 ½✓ | (2 ½) |
| (E) | Πx (15)/4 =-176.71 ½✓ | 80 ½✓ | 15 ½✓ | -14 136.80 ½✓ | -2650.65½✓ | (2 ½) |
| (F) | ½ × 30 × 40 600 ½✓ | 120 ½✓ | 13.33½ ✓ | 72 000 ½✓ | 7998½✓ | (2 ½) |
| TOTAL | 6 823.29✓ | | | 370 863.20✓ | 233 345.35✓ | (3) |

(18)

$\dot{x} = \Sigma Ax/\Sigma A$
$= 370\ 863.20/\ 6\ 823.29$ ½✓
$= 54.35$ mm ½✓

$\bar{Y} = \Sigma Ay/\Sigma A$
$= 233\ 345.35/6\ 823.29$ ½✓
$= 34.20$ mm ½✓

(2)
**[20]**

**QUESTION 6**

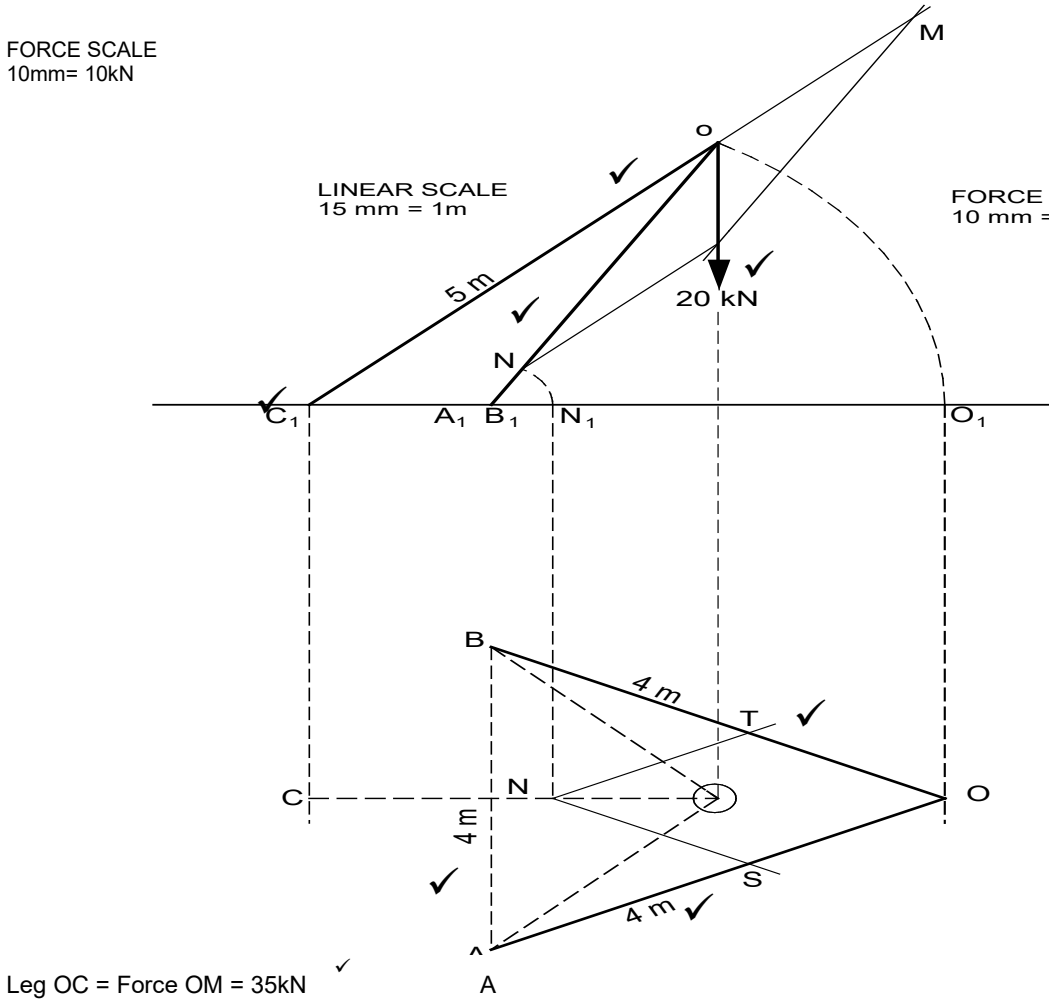


Leg OC = Force OM = 35kN ✓
Leg OA = Force OA = 28 KN ✓
Leg OB = Force OT = 28 KN ✓

**[10]**

**QUESTION 7**

7.1 Ohm's law states that the current through a conductor under constant conditions is proportional to the potential difference (voltage) across the conductor.✓I = V / R✓
**OR**
The current through the conductor between the two points✓ is directly proportional to the voltage across two points. ✓

**OR** The current flowing in a circuit is directly proportional to the potential in difference✓ and inversely proportional to the resistance in the circuit. ✓

(2)

7.2 7.2.1 P = VI
I = P/V
V = 40W / 160V✓
= 0.25 A✓ (2)

7.2.2 V = IR
R = V/I
= 160V/0.25A✓
= 640 Ω✓ (2)

7.2.3 Unit = KWh
Applying 40 W for 6 hrs✓
Energy used = 6 × 40 W
= 6 × 0.04 kWh✓
= 0.24 kWh
Cost = unit × tariff✓
= 0.24 × 1.1
= 26 c✓ (4)
**[10]**

**TOTAL: 100**