higher education & training

Department:
Higher Education and Training
REPUBLIC OF SOUTH AFRICA

MARKING GUIDELINE

NATIONAL CERTIFICATE

BUILDING DRAWING N3

23 November 2022

This marking guideline consists of 15 pages.

Copyright reserved

QUESTION 1: THEORY

1.1	True		
1.2	False		
1.3	True		
1.4	False		
1.5	True		
1.6	False		
1.7	True		
1.8	True		
1.9	True		
1.10	True	(10 × 1)	(10)
			[10]

QUESTION 2: FLOORS

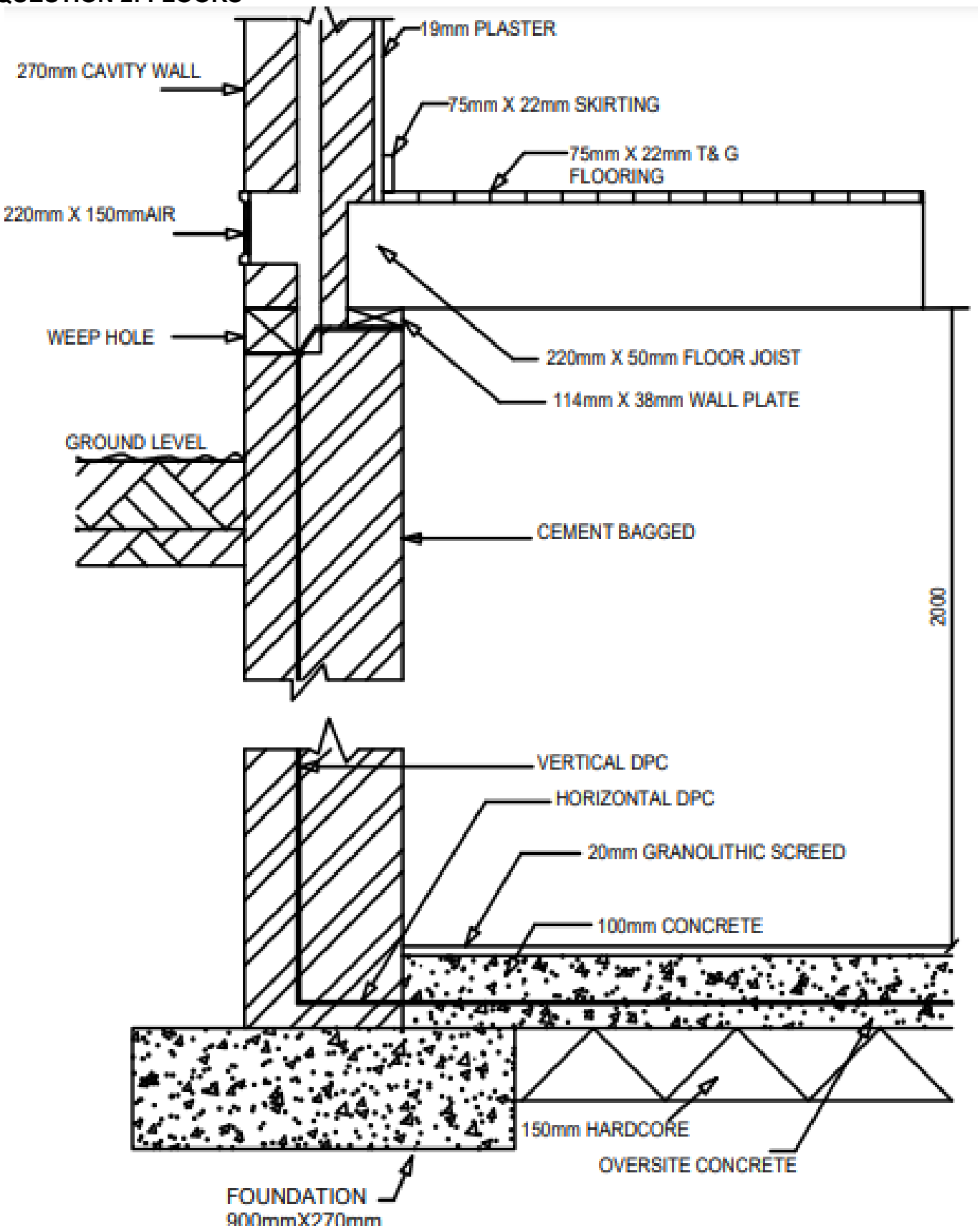

VERTICAL SECTION THROUGH THE EXTERNAL WALL, THE SUSPENDED FLOOR, THE CONCRETE FLOOR AND THE FOUNDATION.
SCALE 1:10

Copyright reserved

QUESTION 2: RUBRIC – EXTERNAL WALL, FLOORS FOUNDATION			
PART OF DRAWING	**MARKING CRITERIA**	**POSSIBLE MARK**	**REMARKS**
Concrete foundation Over site concrete Concrete wall screed	Correct position	4	
	Labelling	4	
	Dimensions	4	
	Hatching	4	
Basement wall Cavity wall Plaster Vertical and horizontal DPC	Correct position	5	
	Labelling	5	
	Dimensions	3	
	Hatching	3	Not for DPC
Wall plate Floor joist Flooring Skirting	Correct position	4	
	Labelling	4	
	Dimensions	4	
	Hatching	3	
Air vent Weep hole	Correct position	2	
	Labelling	2	
	Dimensions	2	
	Hatching	2	Not floor joist
Ground level Hard core	Correct position	2	
	Labelling	2	
	Dimensions	1	
	Hatching	2	
Overall correctness		**62**	
Overall impression		2	
Neatness		2	
Title		1	
Scale		1	
Subtotal		**68**	
Divided by		3,4	
TOTAL		**20**	

Copyright reserved

QUESTION 2: SUMMARY

Marking criteria	Possible mark	Marker	Internal moderator	External moderator
Correct position	17			
Dimensions	14			
Labels	17			
Hatching	14			
Overall impression	2			
Neatness	2			
Title	1			
Scale	1			
Subtotal	**68**			
Divided by	3,4			
TOTAL:	**20**			

QUESTION 3: WINDOW

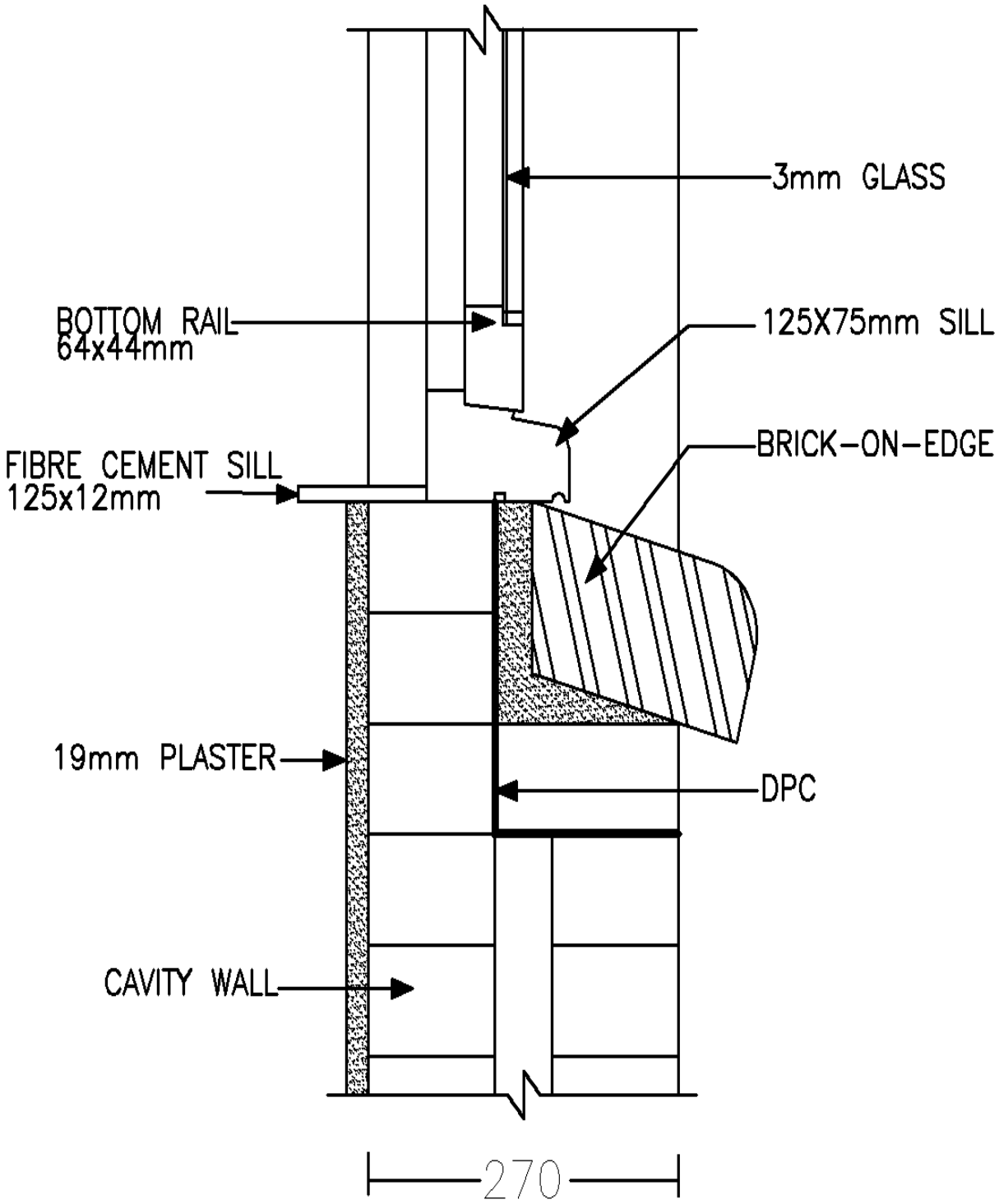

VERTICAL SECTION THROUGH THE BOTTOM OF CASEMENT WINDOW
SCALE 1:5

QUESTION 3: RUBRIC - CASEMENT WINDOW			
PART OF DRAWING	**MARKING CRITERIA**	**POSSIBLE MARK**	**REMARKS**
Glass Bottom rail Sill, Fibre-cement sill	Correct position	4	
	Labelling	4	
	Dimensions	4	
Brick-on-edge Cavity wall Plaster DPC	Correct position	4	
	Labelling	4	
	Dimensions	2	
	Hatching	2	
Overall correctness		**24**	
Overall impression		2	
Neatness		2	
Title		1	
Scale		1	
Subtotal		**30**	
Divided by		1,5	
TOTAL		**20**	

Copyright reserved

QUESTION 3: SUMMARY

Marking criteria	Possible mark	Marker	Internal moderator	External moderator
Correct position	8			
Dimensions	6			
Labels	8			
Hatching	2			
Overall impression	2			
Neatness	2			
Title	1			
Scale	1			
Subtotal	**30**			
Divided by	1,5			
TOTAL:	**20**			

QUESTION 4: ROOF

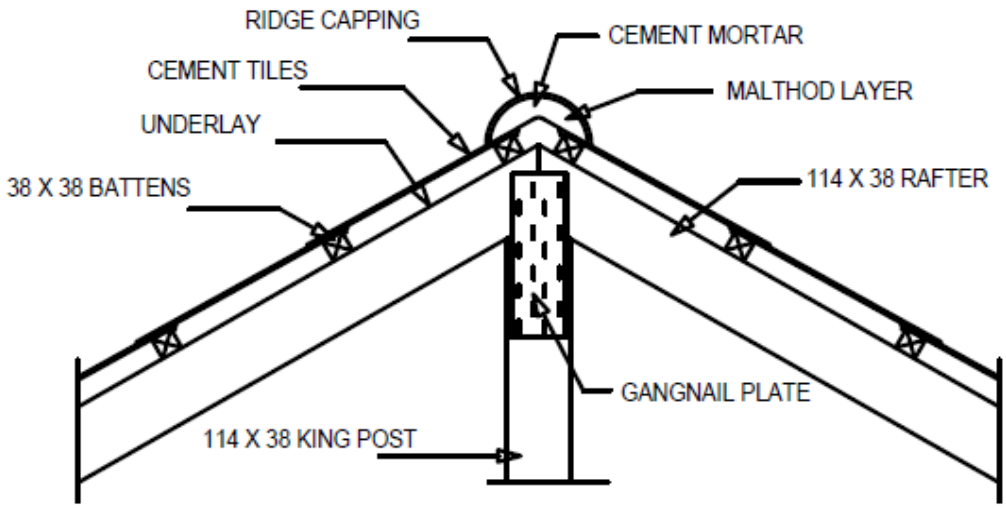

VERTICAL SECTION AT THE RIDGE CONSTRUCTION
SCALE1:10

QUESTION 4: RUBRIC – RIDGE			
PART OF DRAWING	**MARKING CRITERIA**	**POSSIBLE MARK**	**REMARKS**
Ridge capping, Tiles Malthoid layer, Cement mortar Gang nail	Correct position	5	
	Labelling	5	
	Hatching	2	Gang nail, mortar
King post Rafter Battens	Correct position	3	
	Labelling	3	
	Dimensions	3	
	Hatching	1	
	Overall correctness	**22**	
	Overall impression	2	
	Neatness	2	
	Title	1	
	Scale	1	
	Subtotal	**28**	
	Divided by	1,87	
	TOTAL:	**15**	

QUESTION 4: SUMMARY

Marking criteria	Possible mark	Marker	Internal moderator	External moderator
Correct position	8			
Labels	8			
Dimensions	3			
Hatching	3			
Overall impression	2			
Neatness	2			
Title	1			
Scale	1			
Subtotal	**28**			
Divided by	1,87			
TOTAL:	**15**			

Copyright reserved

QUESTION 5: STAIRS

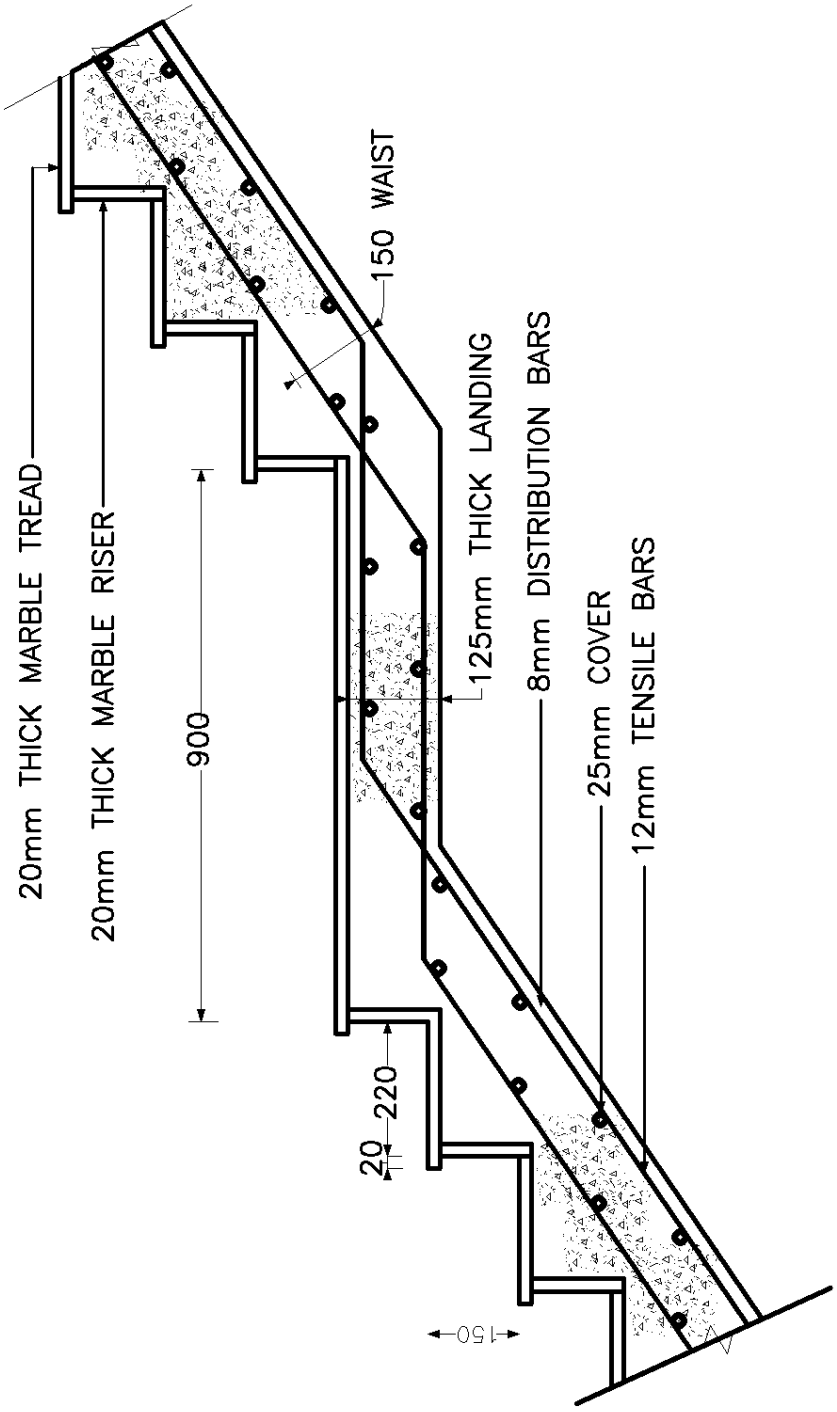

SECTION THROUGH REINFORCED CONCRETE STAIRS
SCALE 1:10

QUESTION 5: RUBRIC – REINFORCED CONCRETE STAIRS			
PART OF DRAWING	**MARKING CRITERIA**	**POSSIBLE MARK**	**REMARKS**
Landing Thread Rise	Correct position	3	
	Labelling	3	
	Dimensions	3	
	Hatching	1	
Waist Cover Finishing	Correct position	3	
	Labelling	3	
	Dimensions	3	
	Hatching	1	
Distribution bars Tension bars	Correct position	2	
	Labelling	2	
	Dimension	2	
Overall correctness		**26**	
Overall impression		2	
Neatness		2	
Title		1	
Scale		1	
Subtotal		**32**	
Divided by		2	
TOTAL:		**16**	

Copyright reserved

QUESTION 5: SUMMARY

Marking criteria	Possible mark	Marker	Internal moderator	External moderator
Correct position	8			
Labels	8			
Dimensions	8			
Hatching	2			
Overall impression	2			
Neatness	2			
Title	1			
Scale	1			
Subtotal	**32**			
Divided by	2			
TOTAL:	**16**			

QUESTION 6: PLUMBING

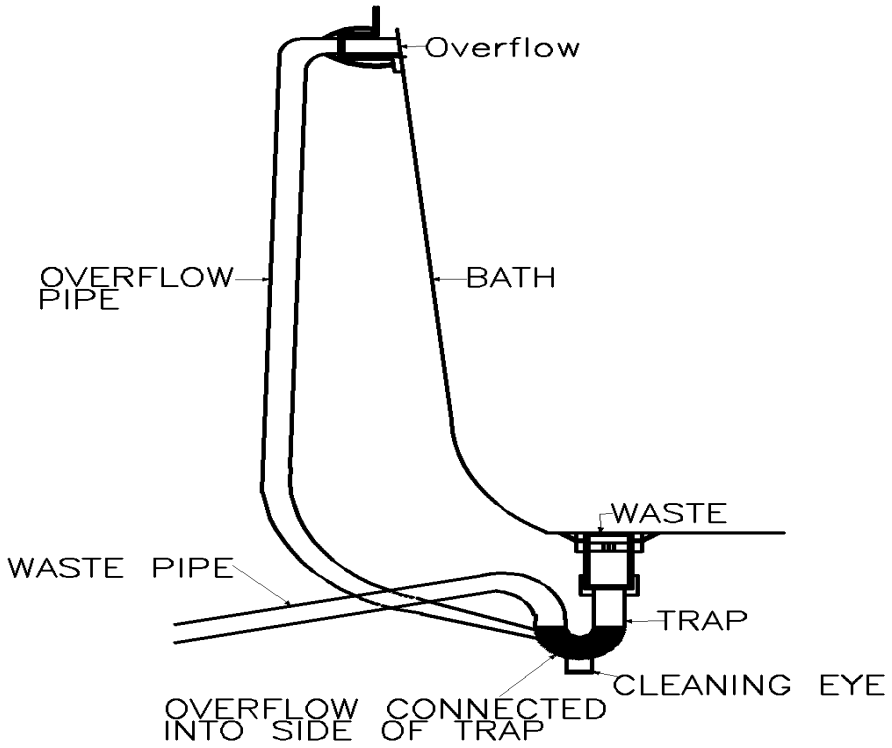

OVERFLOW TRAYS ARRANGEMENT

QUESTION 6: RUBRIC: PLUMBING – BATH OVERFLOW TRAYS ARRANGEMENT			
PART OF DRAWING	**MARKING CRITERIA**	**POSSIBLE MARK**	**REMARKS**
Bath, waste, waste pipe, trap Overflow, overflow pipe, Overflow connected to trap, Cleaning eye, trap	Correct position	8	
	Labelling	8	
	Overall correctness	**16**	
	Overall impression	2	
	Neatness	2	
	Title	1	
	Scale	1	
	Subtotal	**22**	
	Divided by	2,2	
	TOTAL:	**10**	

QUESTION 6: SUMMARY

Marking criteria	Possible mark	Marker	Internal moderator	External moderator
Correct position	8			
Labels	8			
Overall impression	2			
Neatness	2			
Title	1			
Scale	1			
Subtotal	**22**			
Divided by	2,2			
TOTAL:	**10**			

Copyright reserved

QUESTION 7: BRICKWORK

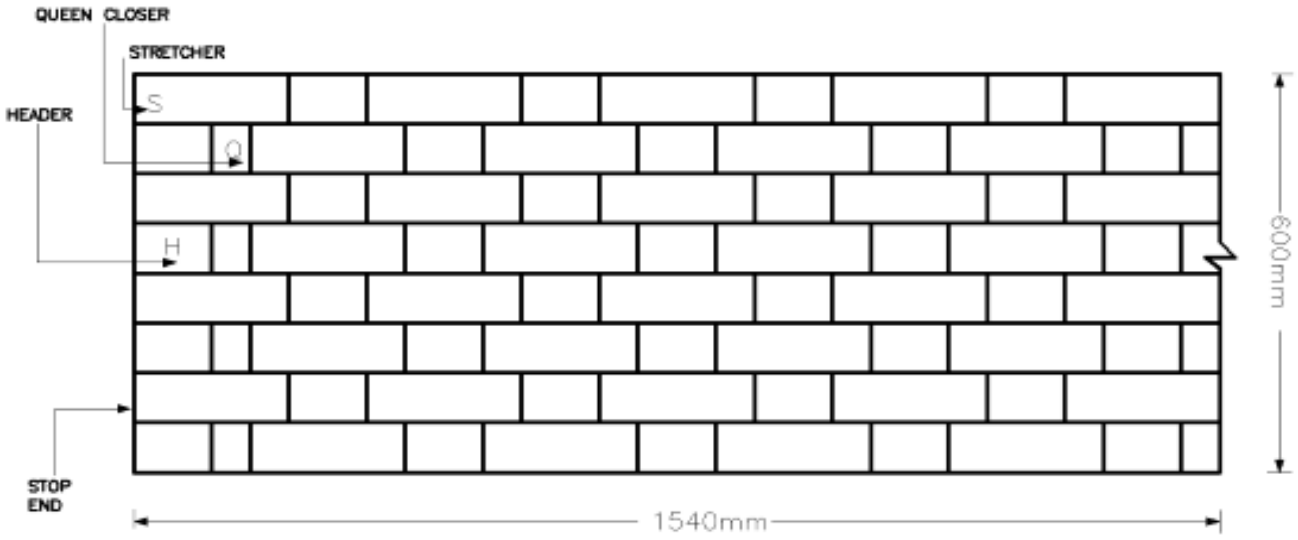

FRONT ELEVATION OF A WALL BUILD IN FLEMISH BOND
SCALE1:10

QUESTION 7: FLEMISH BOND			
PART OF DRAWING	**MARKING CRITERIA**	**POSSIBLE MARK**	**REMARKS**
Stretcher Header Queen closer	Correct position	3	
	Labelling	3	
	Dimensions	3	
Wall length Wall height Stop end	Correct position	1	
	Labelling	1	
	Dimensions	2	
Overall correctness		**13**	
Overall impression		2	
Neatness		2	
Title		1	
Scale		1	
Subtotal		**19**	
Divided by		2,1	
TOTAL:		**9**	

Copyright reserved

QUESTION 7: SUMMARY

Marking criteria	Possible mark	Marker	Internal moderator	External moderator
Correct position	4			
Labels	4			
Dimensions	5			
Overall impression	2			
Neatness	2			
Title	1			
Scale	1			
Subtotal	**19**			
Divided by	2,1			
TOTAL:	**9**			

GRAND TOTAL: 100

Copyright reserved