higher education & training

Department:
Higher Education and Training
REPUBLIC OF SOUTH AFRICA

MARKING GUIDELINE

NATIONAL CERTIFICATE

BUILDING DRAWING N3

30 November 2023

This marking guideline consists of 14 pages.

Copyright reserved

QUESTION 1: FLOORS

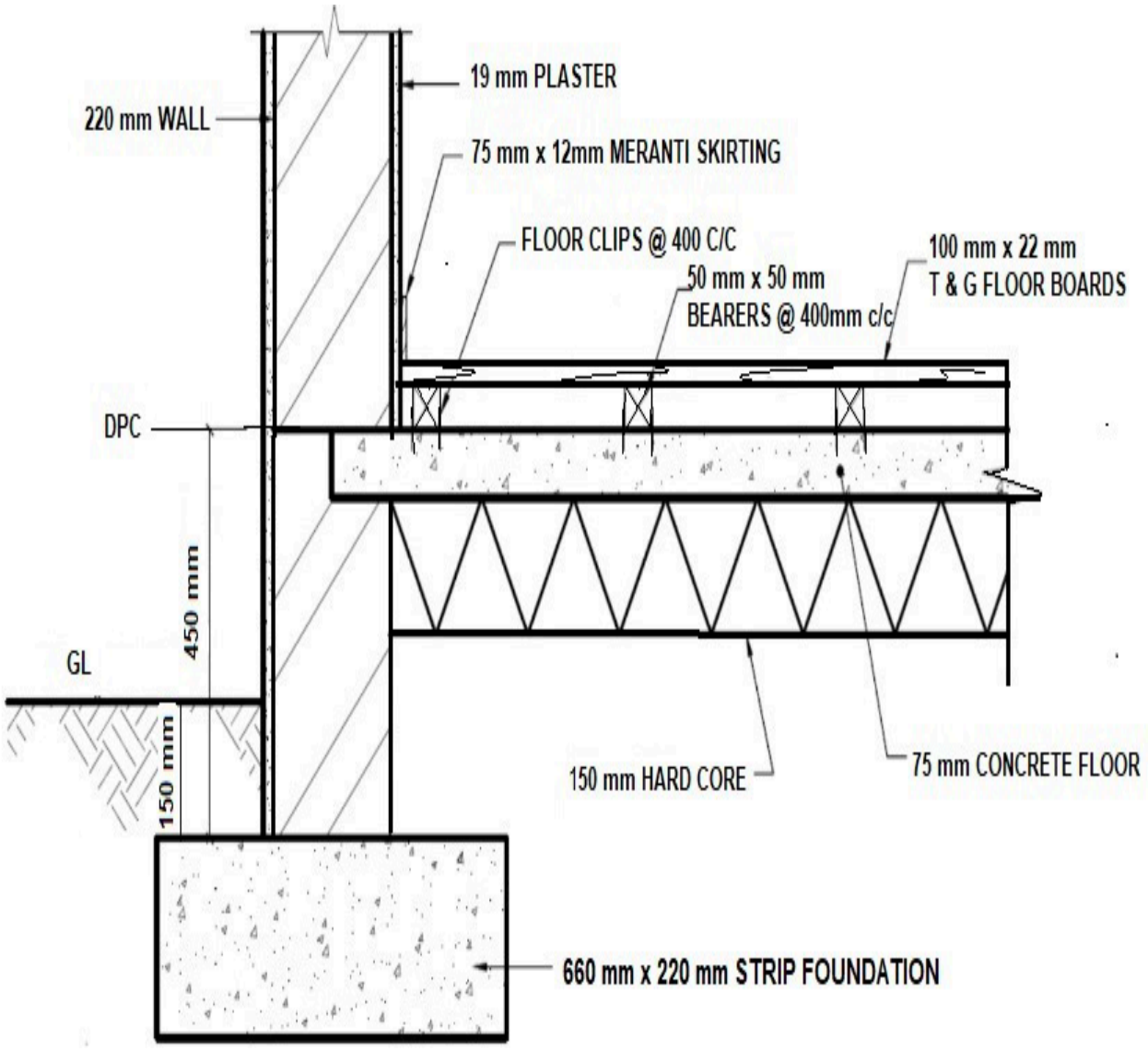

VERTICAL SECTION THROUGH A CONCRETE FLOOR WITH BEARERS AND FLOOR BOARDS

SCALE1:10

QUESTION 1: RUBRIC – EXTERNAL WALL, FLOOR & FOUNDATION					
Part of drawing	**Marking criteria**	**Possible mark**	**Marker**	**Internal Moderator**	**External Moderator**
Strip foundation Ground level Hard core Concrete floor	Correct position	4			
	Labelling	4			
	Dimensioning	4			
	Hatching	4			
Bearers Clips T & G floor boards Skirting	Correct position	4			
	Labelling	4			
	Dimensioning	4			
	Hatching	3			
Plaster Wall DPC	Correct position	3			
	Labelling	3			
	Dimensioning	3			
	Hatching	2			
	Subtotal	**42**			
	Divided by	**3**			
Overall correctness		**14**			
	Accuracy	**3**			
	Line work	**2**			
Balance layout and neatness		**1**			
TOTAL:		**20**			

NOTE: No marks will be allocated for any part of the drawing in the incorrect position, but marks may be allocated for the hatching of that component.

Copyright reserved

QUESTION 2: STONE DRESSING TO OPENING

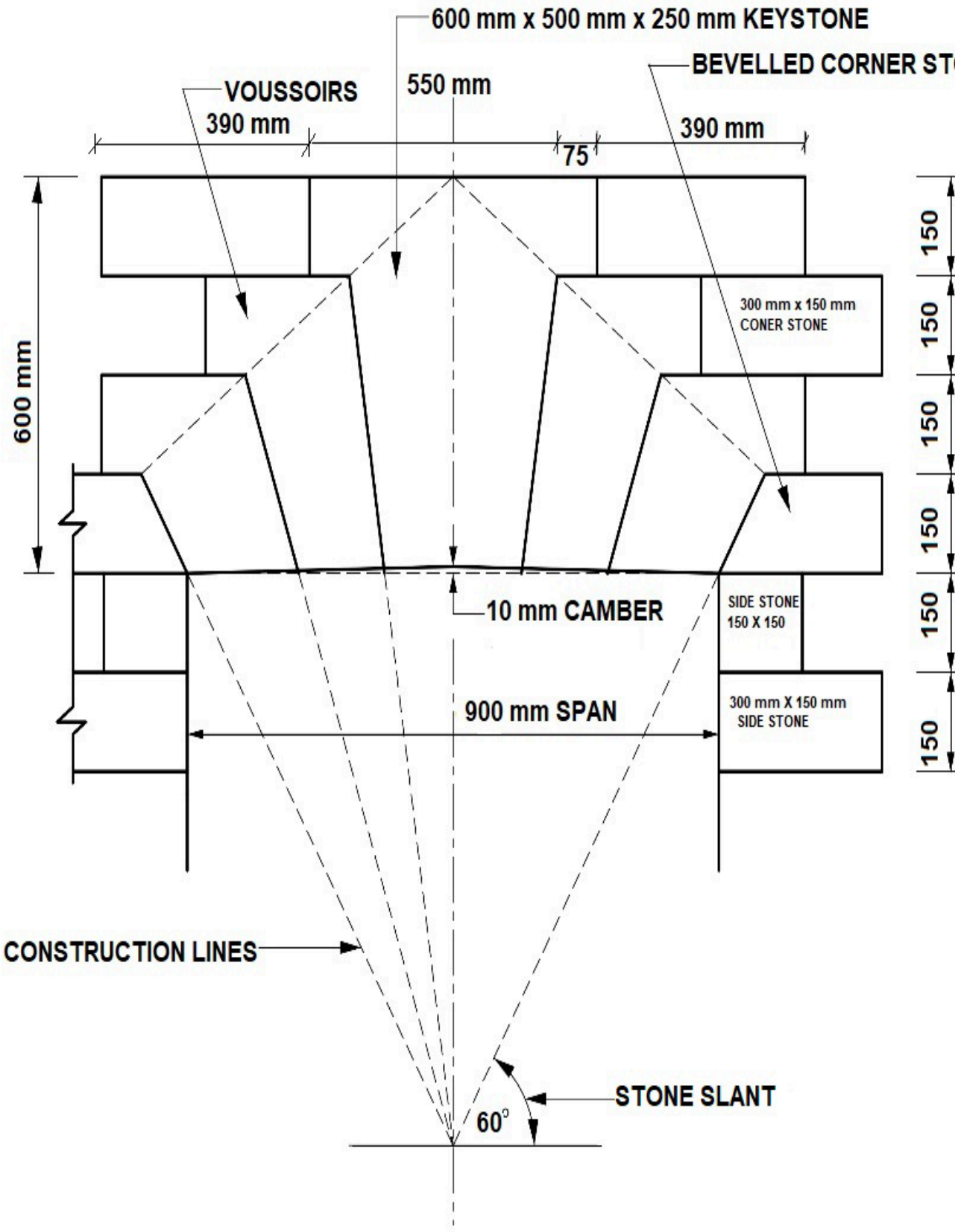

FRONT VIEW OF FLAT ARCH WITH STEPPED AND BONDED EXTRADOS
SCALE 1:10

QUESTION 2: RUBRIC – STONE DRESSING TO OPENING (FLAT ARCH)					
Part of drawing	**Marking criteria**	**Possible mark**	**Marker**	**Internal Moderator**	**External Moderator**
Construction lines Voussoirs Camber	Correct position	6			
	Labelling	3			
	Dimensioning	1			
Span Keystone Corner stones	Correct position	5			
	Labelling	3			
	Dimensioning	3			
Stone slant Side stones	Correct position	4			
	Labelling	2			
	Dimensioning	3			
	Subtotal	**30**			
	Divided by	**3**			
Overall correctness		**10**			
	Accuracy	**2**			
	Line work	**2**			
Balance layout and neatness		**1**			
TOTAL:		**15**			

QUESTION 3: ROOF

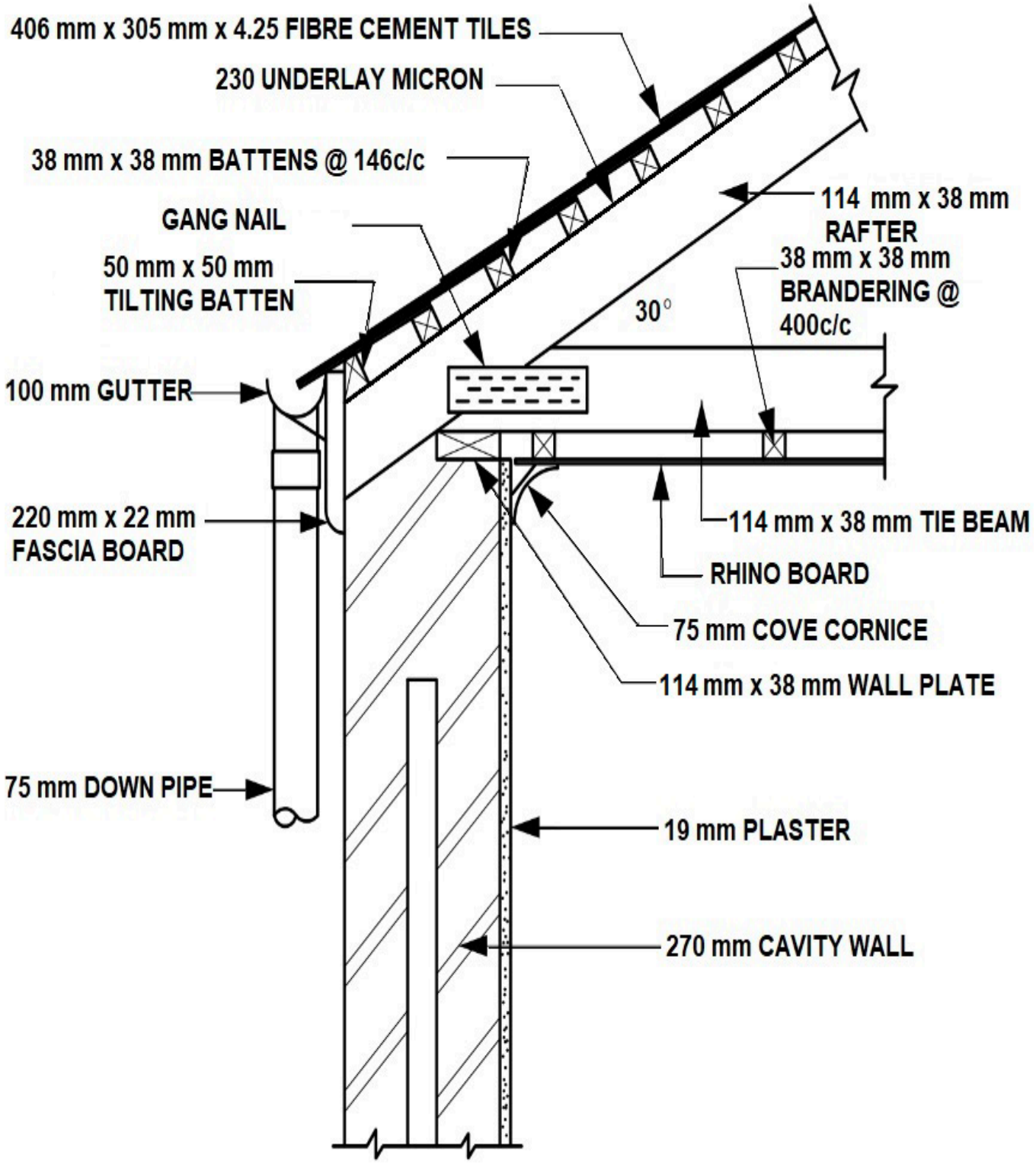

QUESTION 3: RUBRIC – ROOF WITH FLUSH EAVE					
Part of drawing	**Marking criteria**	**Possible mark**	**Marker**	**Internal Moderator**	**External moderator**
Cavity wall, plaster, wall plate, cornice, ceiling – rhino board brandering	Correct position	6			
	Labelling	6			
	Dimensions	5			
	Hatching	4			
Underlay Battens, tilting batten Slates	Correct position	4			
	Labelling	4			
	Dimensions	3			
	Hatching	2			
Fascia board Gutter Down pipe	Correct position	3			
	Labelling	3			
	Dimensions	3			
	Hatching	0			
Tie beam Rafter, Gang nail Pitch	Correct position	4			
	Labelling	3			
	Dimensions	4			
	Hatching	1			
	Subtotal	**55**			
	Divided by	**3.667**			
Overall correctness		**15**			
	Accuracy	**2**			
	Line work	**2**			
Balance layout and neatness		**1**			
TOTAL:		**20**			

Copyright reserved

QUESTION 4: STEEL REINFORCEMENTSLAB AND BEAM

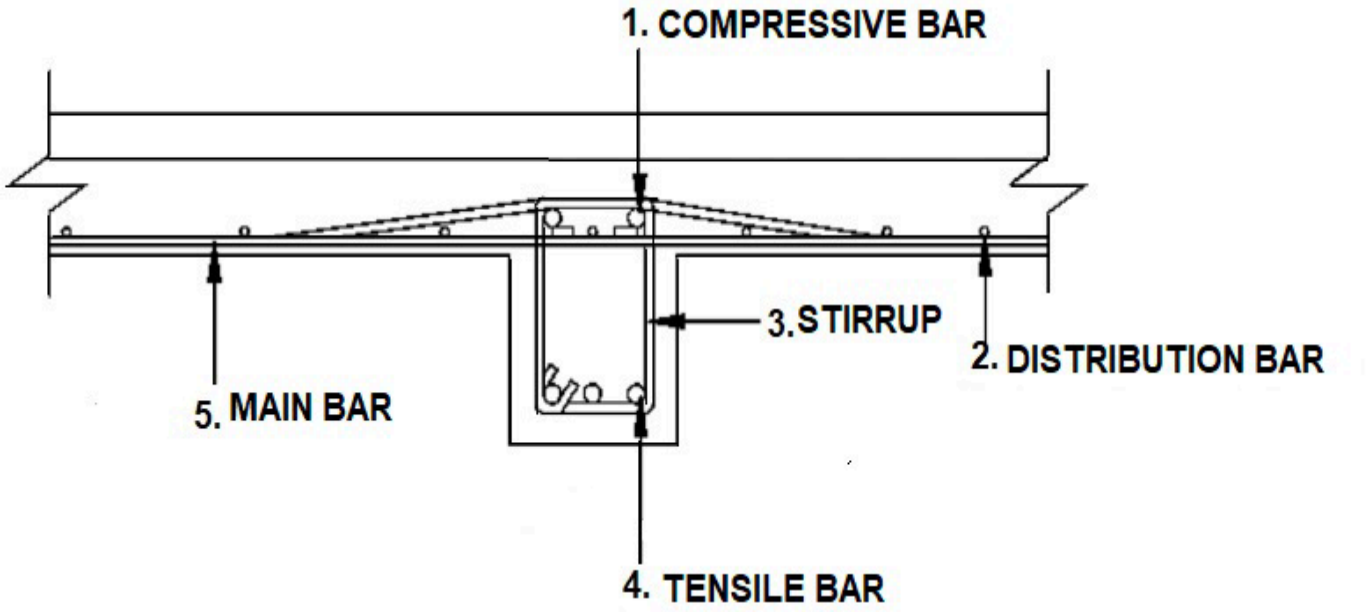

[5]

QUESTION 5: JOINERY – STAIRS

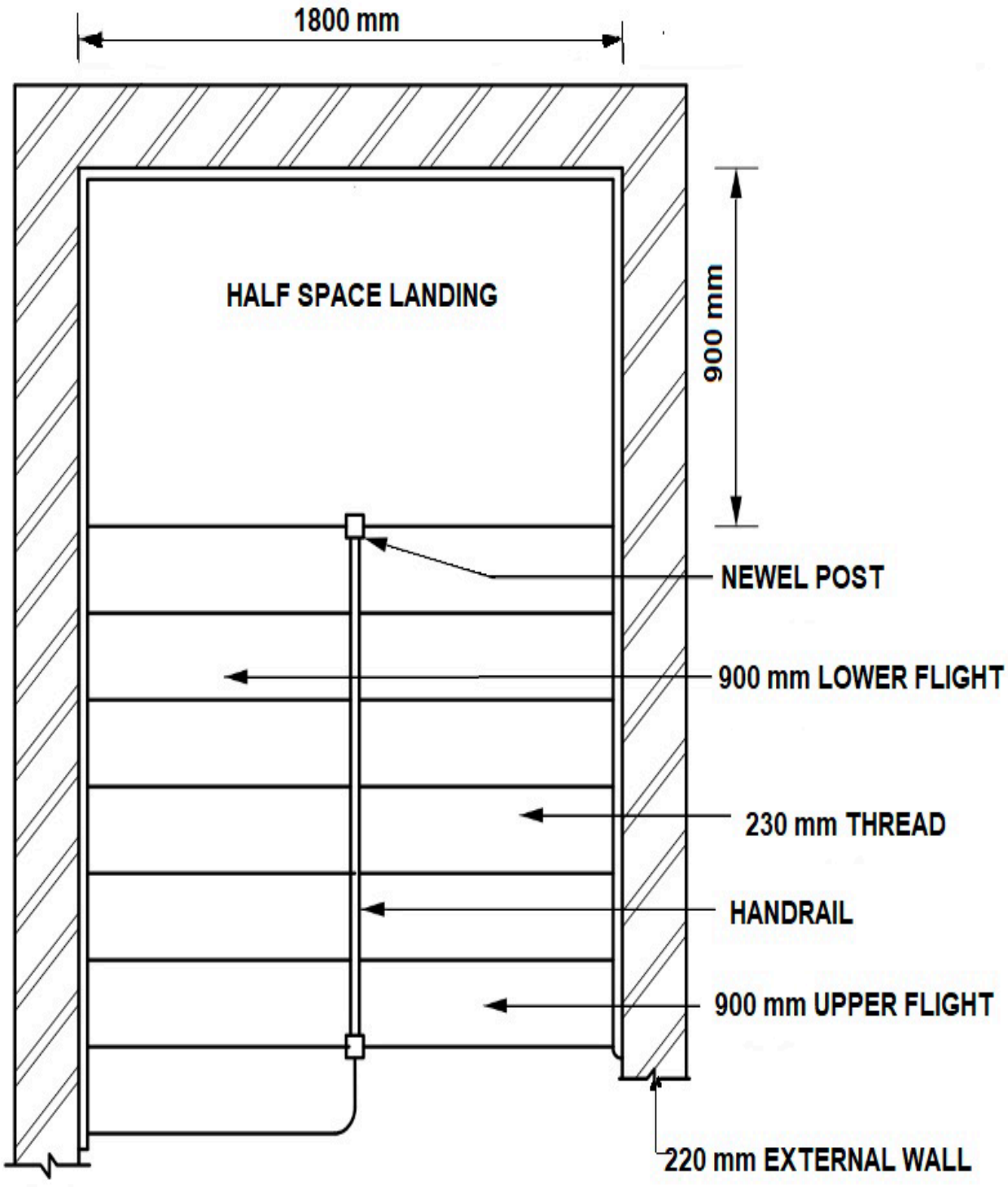

PLAN VIEW OF A HALF SPACE LANDING AND STAIRS
SCALE1:20

QUESTION 5: RUBRIC – JOINERY STAIRS					
Part of drawing	**Marking criteria**	**Possible mark**	**Marker**	**Internal Moderator**	**External Moderator**
External wall Landing Hand rail Newel post	Correct position	5			
	Labelling	4			
	Dimensions	4			
	Hatching	1			
Lower flight Upper flight Treads	Correct position	3			
	Labelling	3			
	Dimensions	3			
	Subtotal	**23**			
	Divided by	**3.29**			
Overall correctness		**7**			
	Accuracy	**1**			
	Line work	**1**			
Balance layout and neatness		**1**			
TOTAL:		**10**			

NOTE: No marks will be allocated for any part of the drawing in the incorrect position, but marks may be allocated for the hatching of that component.

Copyright reserved

QUESTION 6: PLUMBING – BIDET

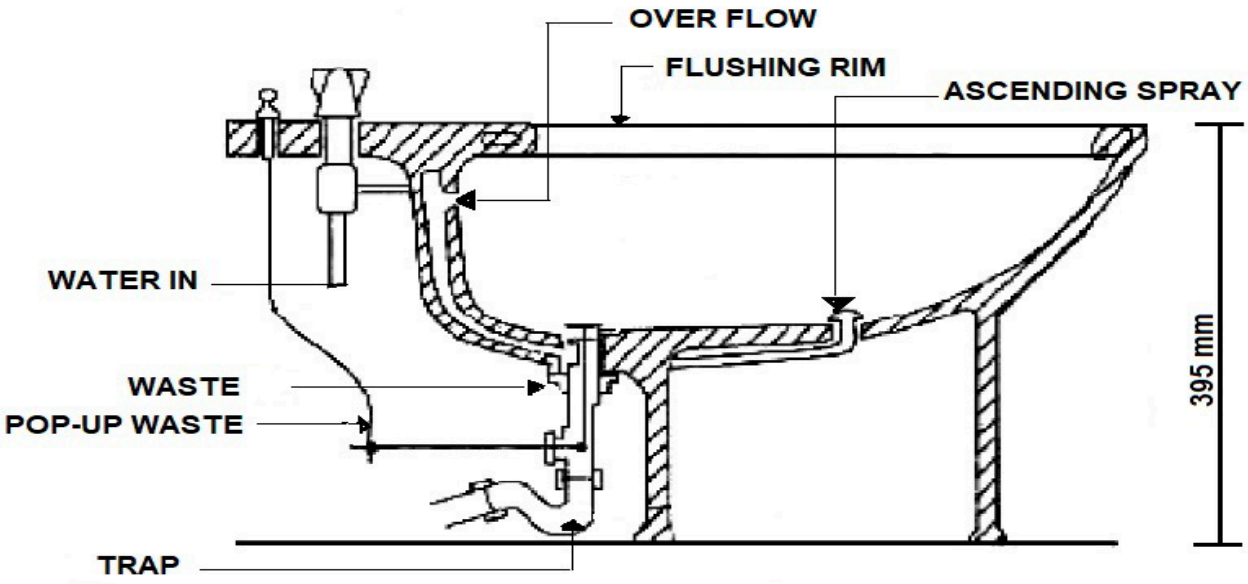

VERTICAL SECTION THROUGH A BIDET

QUESTION 6: PLUMBING					
Part of drawing	**Making criteria**	**Possible mark**	**Marker**	**Internal Moderator**	**Internal Moderator**
Flushing rim Ascending spray Pop-up waste Water flow Waste in, waste, trap,	Correct position	7			
	Labelling	7			
	Dimension	1			
	Subtotal	**15**			
	Divided by	**2.143**			
Overall correctness		**7**			
	Accuracy	**1**			
	Line work	**1**			
Balance layout and neatness		**1**			
TOTAL:		**10**			

NOTE: No marks will be allocated for any part of the drawing in the incorrect position, but marks may be allocated for the hatching of that component.

Copyright reserved

QUESTION 7: STEEL DOOR JAMB

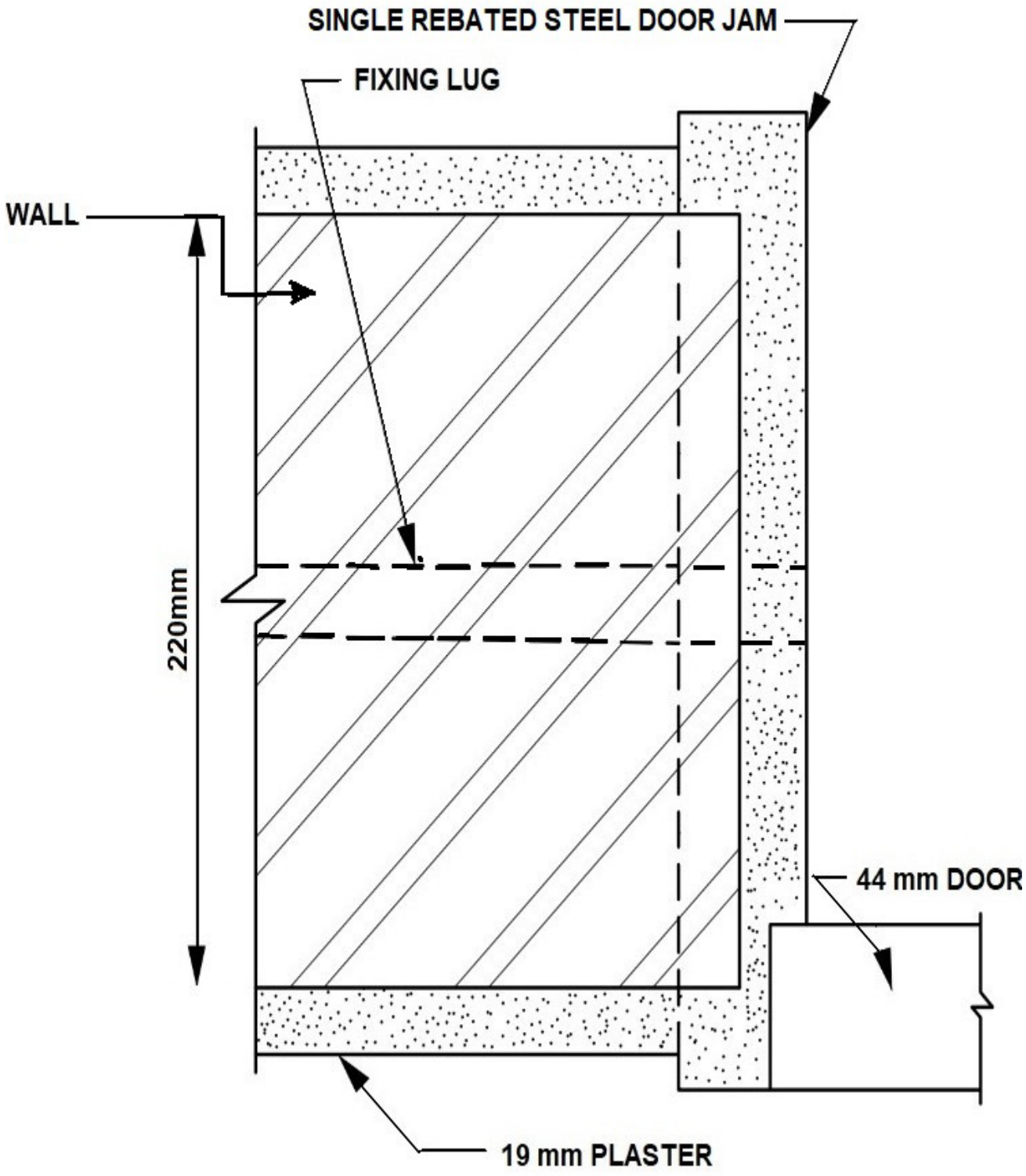

HORIZONTAL SECTION THROUGH A SINGLE REBATED STEEL DOOR JAMB
SCALE 1:2

QUESTION 7: STEEL DOOR JAMB					
Part of drawing	**Marking criteria**	**Possible mark**	**Marker**	**Internal Moderator**	**External Moderator**
Wall Plaster	Correct position	2			
	Labelling	2			
	Dimensions	2			
	Hatching	2			
Door Fixing lug Frame	Correct position	3			
	Labelling	3			
	Dimensions	1			
	Hatching	1			
	Subtotal	**16**			
	Divided by	**2.29**			
Overall correctness		**7**			
	Accuracy	**1**			
	Line work	**1**			
Balance layout and neatness		**1**			
TOTAL:		**10**			

NOTE: No marks will be allocated for any part of the drawing in the incorrect position, but marks may be allocated for the hatching of that component.

QUESTION 8: THEORY

8.1 True
8.2 True
8.3 True
8.4 True
8.5 True
8.6 False
8.7 False
8.8 True
8.9 True
8.10 True

(10 × 1) **[10]**

TOTAL: 100

Copyright reserved