higher education & training

Department:
Higher Education and Training
REPUBLIC OF SOUTH AFRICA

NATIONAL CERTIFICATE

WELDERS' THEORY N2

(11022082)

23 November 2022 (X-paper)
09:00–12:00

Drawing instruments and nonprogrammable calculators may be used.

This question paper consists of 5 pages and 1 diagram sheet.

181Q1E2223

Copyright reserved

DEPARTMENT OF HIGHER EDUCATION AND TRAINING
REPUBLIC OF SOUTH AFRICA

NATIONAL CERTIFICATE
WELDERS' THEORY N2
TIME: 3 HOURS
MARKS: 100

INSTRUCTIONS AND INFORMATION

1. Answer all the questions.
2. Read all the questions carefully.
3. Number the answers according to the numbering system used in this question paper.
4. Use only a blue or black pen.
5. Drawings and diagrams should be clear, neat, and well-proportioned. A pencil may be used.
6. Answer QUESTION 3 on the DIAGRAM SHEET (attached).
7. Write neatly and legibly.

Copyright reserved

QUESTION 1

1.1 Choose an option from COLUMN B that matches each parts of the reciprocating power saw indicated in COLUMN A. Write only the letter (A–G) next to the question number (1.1.1–1.1.6) in the ANSWER BOOK.

COLUMN A	COLUMN B
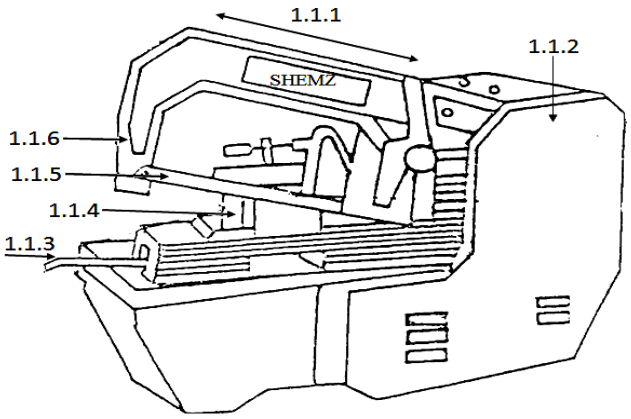	A mechanism to open/close the clamp B drive C blade holder D reciprocating movement of blade E body of machine F clamp G blade

(6 × 1) (6)

1.2 State FOUR safety precautions to be observed when working with an abrasive cut-off saw. (4)

[10]

QUESTION 2

2.1 Make a neat, labelled drawing of a connection between two pieces of angle iron of unequal size.

Show both the angle iron and the notched area. (5)

2.2 2.2.1 What can be used to make assembly aids?

2.2.2 State ONE function of assembly aids.

(2 × 1) (2)

2.3 2.3.1 Make a neat, labelled drawing to show how a flange is set up in a position where two holes are at the top of the pipe.

2.3.2 Explain how the flange is set up as shown in the drawing you made in QUESTION 2.3.1.

(2 × 4) (8)

[15]

Copyright reserved

QUESTION 3

Answer QUESTION 3 on the DIAGRAM SHEET (attached). Detach it from the question paper, write your EXAMINATION NUMBER in the spaces provided and hand it in with the ANSWER BOOK.

FIGURE 1 shows a development drawing of a rectangle to square transition piece.

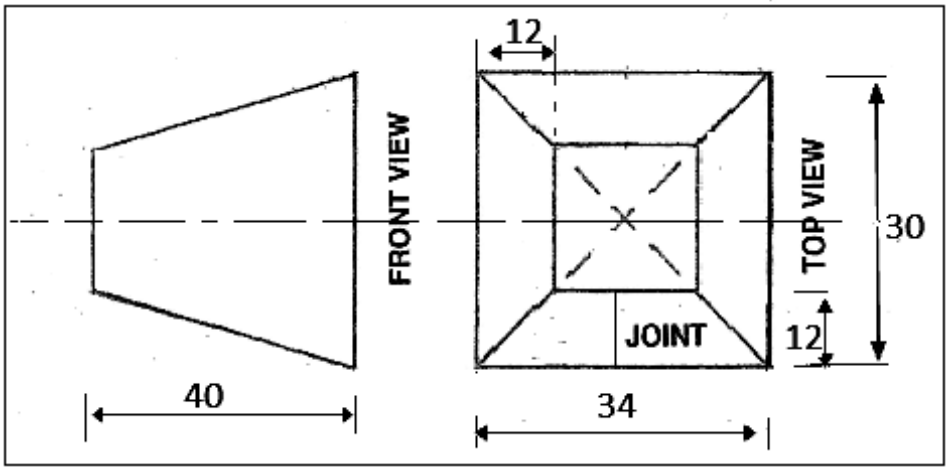

FIGURE 1

3.1 Draw the given views. (3)

3.2 Use the triangulation method to develop the pattern of the transition piece. (12)

[15]

QUESTION 4

4.1 Explain how a spark test is carried out to test for low-, medium and high-carbon steel. (5)

4.2 Name FIVE items manufactured from aluminium. (5)

4.3 Name THREE types of grades of stainless steel. (3)

4.4 We encounter copper in all walks of life on a daily basis. Name the TWO main groups of copper. (2)

[15]

QUESTION 5

5.1 Define the term *case-hardening*. (5)

5.2 Give THREE reasons why steel is tempered. (3)

5.3 Name FIVE destructive tests done on weldings. (5)

5.4 Name TWO vertical members found on a roof truss. (2)

[15]

Copyright reserved

QUESTION 6

6.1 FIGURE 2 shows a tungsten inert gas (TIG) welding setup. Name the items indicated in the drawing by writing only the answer next to the letter (A–E) in the ANSWER BOOK.

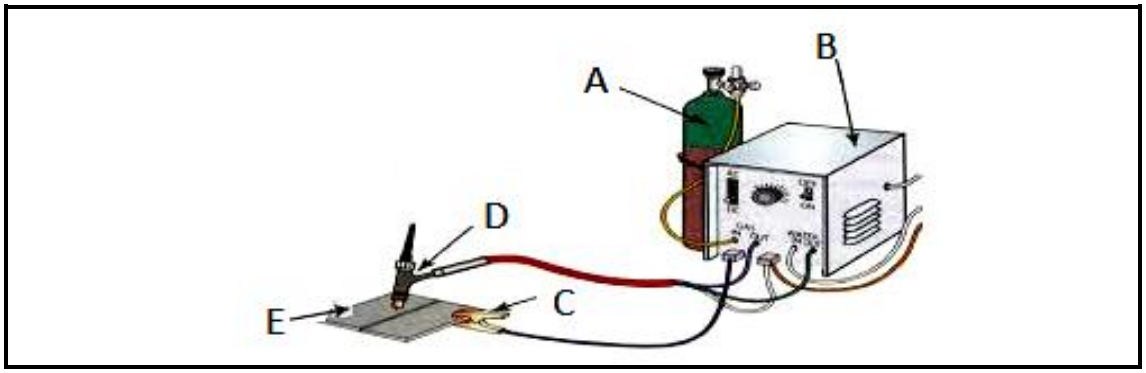

FIGURE 2 (5)

6.2 Indicate whether the following statements are TRUE or FALSE by writing only 'True' or 'False' next to the question number (6.2.1–6.2.6) in the ANSWER BOOK.

6.2.1 The base metal is also called the parent metal.

6.2.2 The electrode core is the inside of the electrode.

6.2.3 The flux fuses with the base metal to form a weld bead.

6.2.4 The arc length is the distance from the top of the electrode to the base metal.

6.2.5 A sealing run is a small weld deposited before the main weld.

6.2.6 The heat-affected zone is the portion of the base metal which has not been melted.

(6 × 1) (6)

6.3 State the difference between *preheating* and *post heating*. (2 × 2) (4)

[15]

QUESTION 7

7.1 Name FIVE contaminants on metal that can have an adverse effect when performing gas cutting or welding. (5)

7.2 State FIVE safety precautions to adhere to when performing gas cutting or welding. (5)

7.3 Explain the operation of a profile cutting machine. (5)

[15]

TOTAL: 100

Copyright reserved

DIAGRAM SHEET

EXAMINATION NUMBER:

QUESTION 3

Copyright reserved