higher education & training

Department:
Higher Education and Training
REPUBLIC OF SOUTH AFRICA

NATIONAL CERTIFICATE

WELDERS' THEORY N2

(11022082)

30 November 2023 (X-paper)
09:00–12:00

Drawing instruments and nonprogrammable calculators may be used.

This question paper consists of 6 pages and 1 drawing sheet.

179Q1E2330

Copyright reserved

DEPARTMENT OF HIGHER EDUCATION AND TRAINING
REPUBLIC OF SOUTH AFRICA

NATIONAL CERTIFICATE
WELDERS' THEORY N2
TIME: 3 HOURS
MARKS: 100

INSTRUCTIONS AND INFORMATION

1. Answer all the questions.
2. Read all the questions carefully.
3. Number the answers according to the numbering system used in this question paper.
4. Use only a black or blue pen.
5. Write neatly and legibly.

Copyright reserved

QUESTION 1

1.1 FIGURE 1 shows a reciprocating power saw.

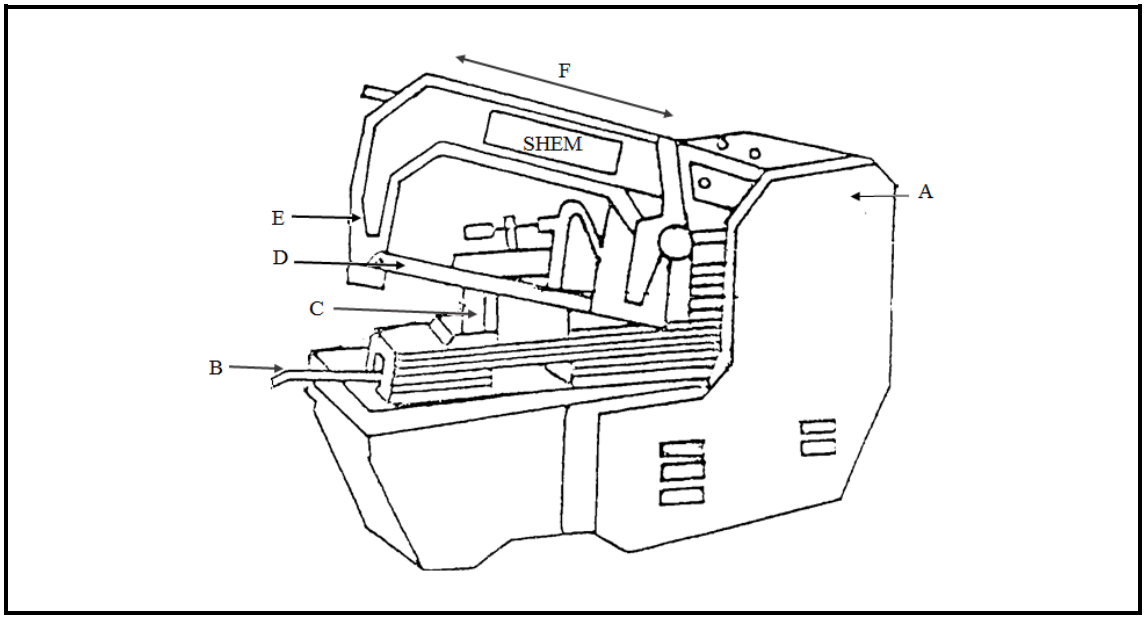

FIGURE 1

Label the components by writing only the answer next to the letter (A–F) in the ANSWER BOOK. (6 × 1) (6)

1.2 FIGURE 2 shows an angle grinder.

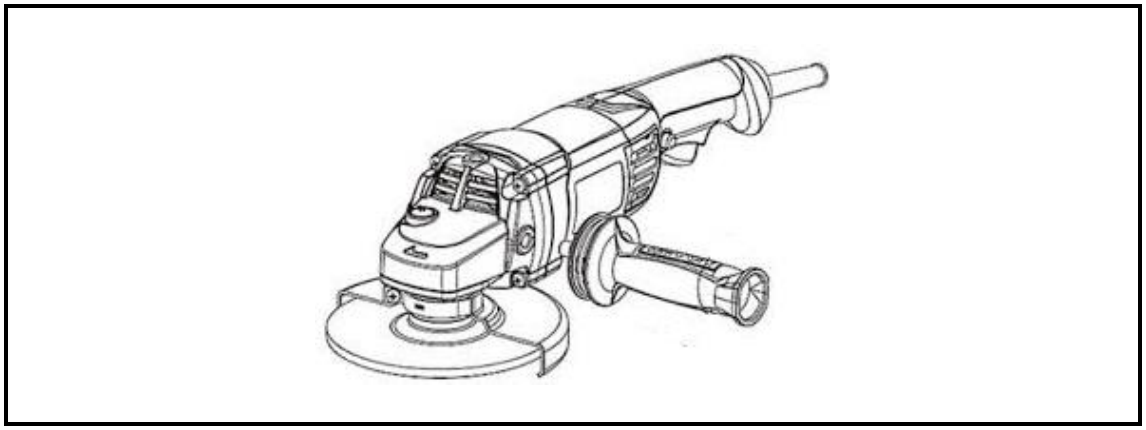

FIGURE 2

List FOUR safety precautions to consider when operating an angle grinder. (4)
[10]

QUESTION 2

2.1 Illustrate, by means of a neat, labelled drawing, the connection between an angle iron and a rolled steel channel. (5)

2.2 What is a jig? (2)
[7]

QUESTION 3

3.1 Illustrate, by means of a neat drawing, a pipe reducer between two pipes of different diameters. Show the large-diameter pipe, small-diameter pipe and reducer. (6)

3.2 What is a centre finder used for? (2)
[8]

QUESTION 4

FIGURE 3 shows a development drawing of a rectangle-to-square transition piece.

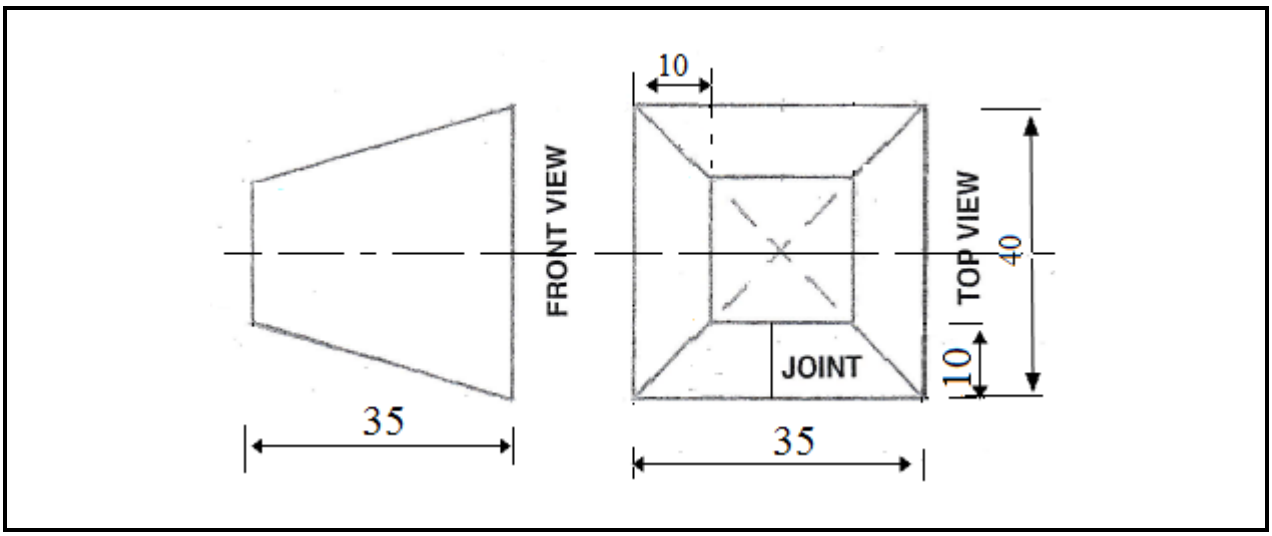

FIGURE 3

4.1 Draw the given views on the DRAWING SHEET (attached). (3)

4.2 Use the triangulation method to develop the pattern of the transition piece. Write your EXAMINATION NUMBER on the DRAWING SHEET and place it in the ANSWER BOOK. (12)
[15]

Copyright reserved

QUESTION 5

Draw a neat figure of a roof truss, showing the following on the diagram: apex, king post, queen post and inclined rafter. **[5]**

QUESTION 6

6.1 Name FIVE metal alloys. (5)

6.2 Differentiate between *white cast iron* and *grey cast iron*. (2 + 2) (4)

6.3 Give THREE advantages of fusion welding. (3)

6.4 State THREE characteristics of austenitic stainless steel. (3)
[15]

QUESTION 7

7.1 Indicate whether the following statements are TRUE or FALSE by writing only 'True' or 'False' next to the question number (7.1.1–7.1.5) in the ANSWER BOOK.

7.1.1 Store acetylene and oxygen cylinders separately.

7.1.2 Stack cylinders on top of each other.

7.1.3 Chain cylinders when transporting them.

7.1.4 Keep cylinders in a cool storage bay in a upright position.

7.1.5 Transport gas cylinders by rolling them on the floor.

(5 × 1) (5)

7.2 Explain the process of liquefying air to produce oxygen. (5)

7.3 State TWO effects of welding over a painted item. (2)
[12]

QUESTION 8

8.1 Illustrate, by means of a neat drawing, each of the following welding symbols:

8.1.1 Fillet weld

8.1.2 Square weld

8.1.3 Bevel weld

(3 × 2) (6)

8.2 Explain each of the following terms:

8.2.1 Heat-affected zone

8.2.2 Sealing run

(2 × 3) (6)

8.3 List THREE characteristics of the weld bead that weaving of the electrode can control. (3)

[15]

QUESTION 9

Name FIVE non-destructive welding testing methods. **[5]**

QUESTION 10

10.1 Explain the *post-heating* of welding. (5)

10.2 Give THREE reasons for tempering steel. (3)

[8]

TOTAL: 100

Copyright reserved

DRAWING SHEET EXAMINATION NUMBER:

QUESTION 4

Copyright reserved