higher education & training

Department:
Higher Education and Training
REPUBLIC OF SOUTH AFRICA

MARKING GUIDELINE

NATIONAL CERTIFICATE

WELDERS' THEORY N2

30 November 2023

This marking guideline consists of 6 pages.

Copyright reserved

QUESTION 1

1.1 A: Body of machine
B: Mechanism to open or close the vice/clamp
C: Clamp
D: Blade
E: Blade holder
F: Movement of blade (6 × 1) (6)

1.2
- Use the correct PPE.
- Ensure that the workpiece is securely clamped.
- Do not attempt to cut hard metals.
- Make sure the disc is installed correctly.
- Check if the disc is not damaged.
- Ensure that the disc is secured properly.
- Ensure the electrical cords are in good condition.
- Make sure that there is a screen between yourself and workers working nearby because of the sparks that fly.
- Do not jam the blade into the workpiece.
- Remove the plug from the wall when changing the disc. (Any 4 × 1) (4)

[10]

QUESTION 2

2.1

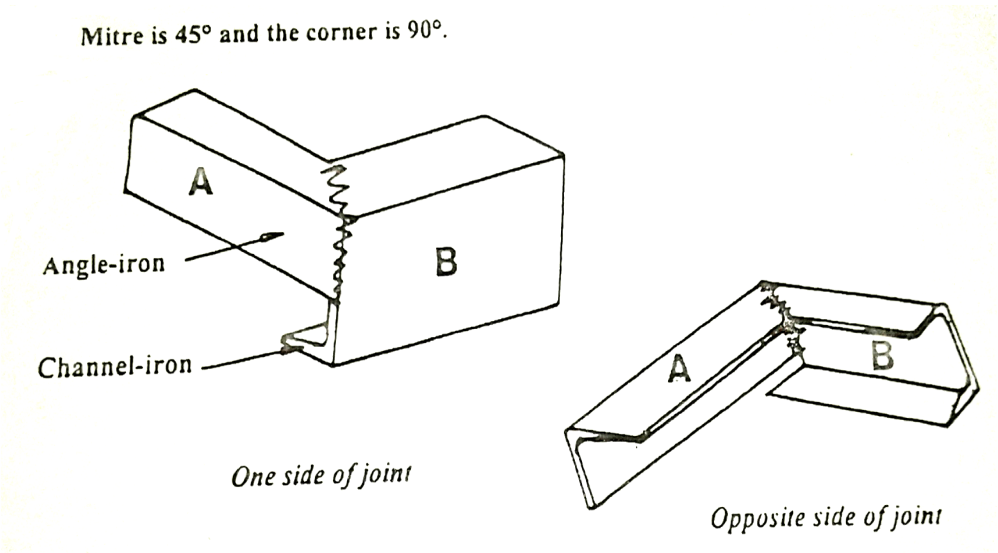

(Any view accepted)
(1 mark for accuracy and neatness) (5)

2.2 A jig is a device used to hold component parts that are to be welded together in proper relation to each other. (2)

[7]

QUESTION 3

3.1

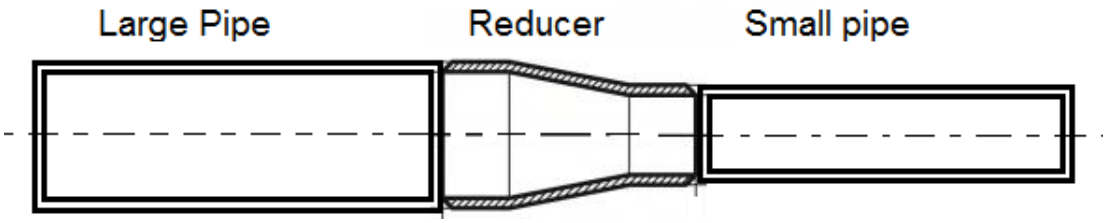

(2 marks for accuracy and neatness) (6)

3.2 A centre finder is used to mark of reference lines which is parallel to the axis of the pipe. (2)

[8]

QUESTION 4

4.1

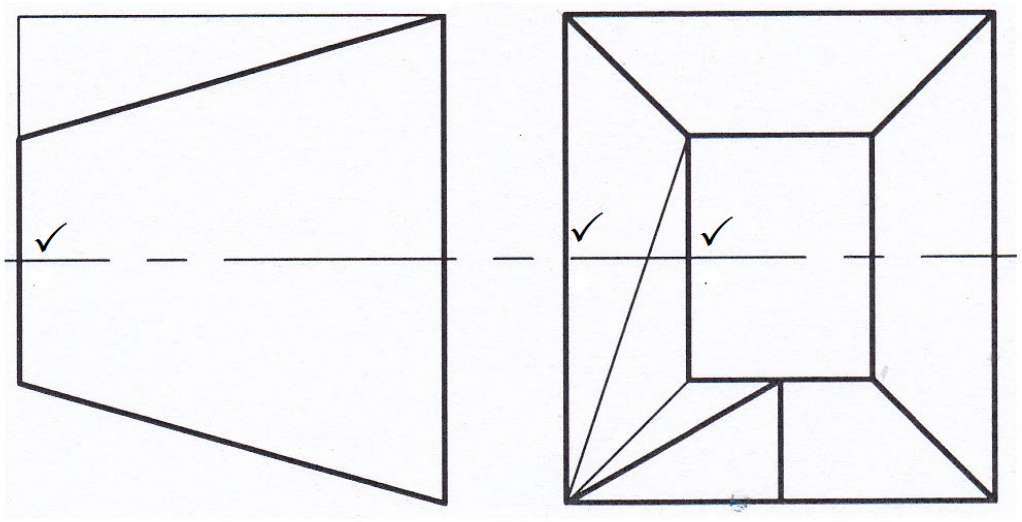

GIVEN VIEWS OF A RECTANGLE-TO-SQUARE TRANSITION PIECE (3)

4.2

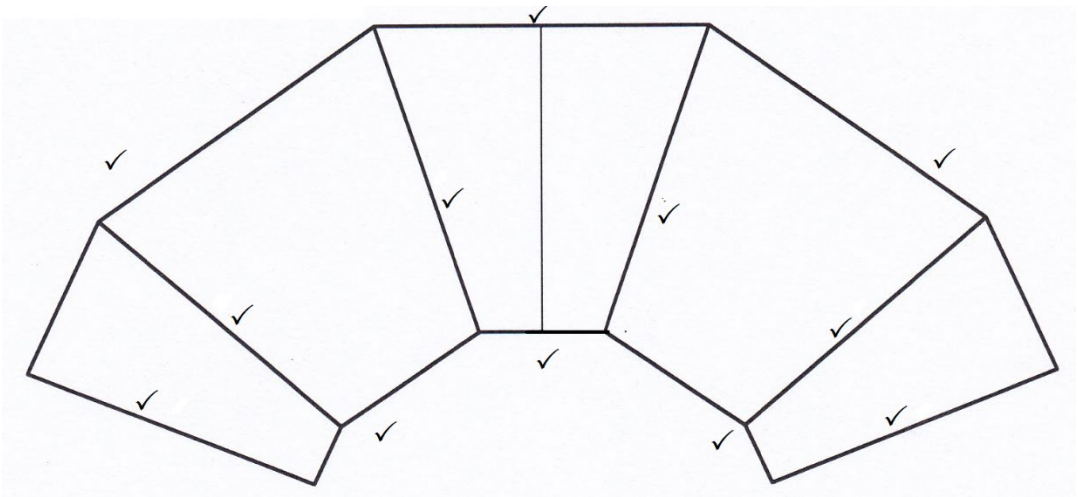

DEVELOPMENT OF THE TRANSITION PIECE (12)

[15]

QUESTION 5

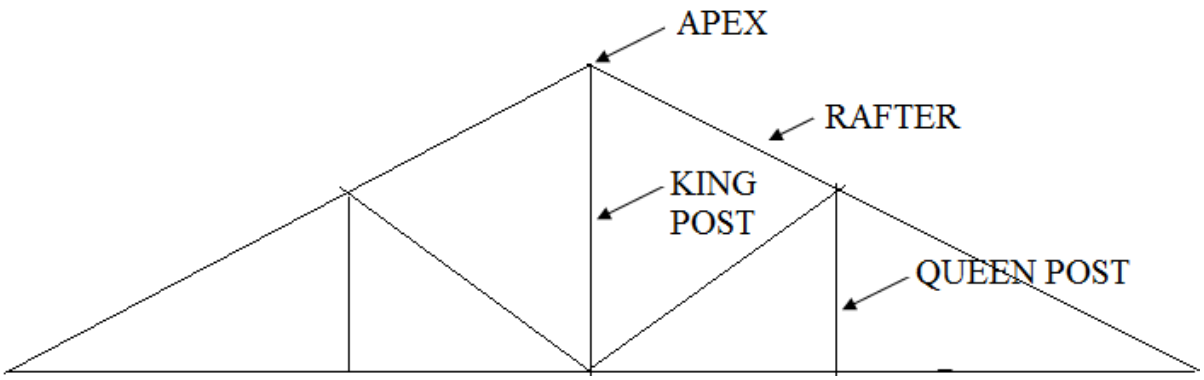

(1 mark for neatness and accuracy) **[5]**

QUESTION 6

6.1
- Brass
- Aluminium
- Lead
- Bronze
- Pewter
- Solder

(Any 5 × 1) (5)

6.2 White cast iron contains carbon combined with pearlite crystals.✓ The carbon may not be seen as flakes but is dissolved in the pearlite forming cementite.✓ Grey cast iron consists of mainly pearlite✓ and the graphite flakes are dispersed.✓ (2 + 2) (4)

6.3
- There is colour similarity.
- There is no restriction on working temperatures.
- It is suitable for all types of machining and grinding. (3)

6.4
- Heat treatment may not be applied.
- It is nonmagnetic.
- It is highly resistant to corrosion.
- It is ductile.
- It has a higher expansion coefficient than mild steel.
- It is cold-hardening

(Any 3 × 1) (3)
[15]

QUESTION 7

7.1
7.1.1 True
7.1.2 False
7.1.3 True
7.1.4 True
7.1.5 False

(5 × 1) (5)

7.2 Air is forced into a large vessel were it is cleaned, filtered and compressed. The air is then cooled and brought to atmospheric pressure. The change from high pressure under very low temperature to a lower pressure causes the air to liquefy. Oxygen and nitrogen can be separated because of the difference in their boiling points. (5)

7.3 When welding, the paint boils and combines with weld metal leaving impurities and porosity resulting in a poor weld. (2)
[12]

QUESTION 8

8.1 8.1.1 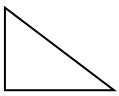

8.1.2 

8.1.3 

(3 × 2) (6)

8.2 8.2.1 A heat-affected zone is the portion of the base metal which has not been melted, but the mechanical properties or microstructures have been altered by the heat of the welding.

8.2.2 A sealing run is a small weld deposited on the root side of a corner or butt joint after the completion of the main weld.

(2 × 3) (6)

8.3
- Penetration
- Porosity
- Weld build up
- Weld width
- Undercut
- Overlap
- Slag inclusions

(Any 3 × 1) (3)
[15]

QUESTION 9

- Visual inspection
- Radiographic testing
- Magnetic particle test
- Liquid penetrate test
- Ultrasonic testing **[5]**

QUESTION 10

10.1 Pos-theating is the heating of steel✓ after it is welded.✓ The purpose of post-heating a weld is to slow down✓ the cooling rate✓ of the welded metal to avoid brittleness and loss of weld strength.✓ (5)

10.2
- Removes stresses and strains
- Introduces toughness
- Reduces brittleness (3)

[8]

TOTAL: 100

Copyright reserved