higher education & training

Department:
Higher Education and Training
REPUBLIC OF SOUTH AFRICA

NATIONAL CERTIFICATE

TOOLMAKERS THEORY N2

(11020202)

28 November 2022 (X-paper)
09:00–12:00

Drawing instruments and nonprogrammable calculators may be used.

This question paper consists of 6 pages and 2 addendums.

270Q1E2228

Copyright reserved

DEPARTMENT OF HIGHER EDUCATION AND TRAINING
REPUBLIC OF SOUTH AFRICA

NATIONAL CERTIFICATE
TOOLMAKERS THEORY N2
TIME: 3 HOURS
MARKS: 100

INSTRUCTIONS AND INFORMATION

1. Answer all the questions.
2. Read all the questions carefully.
3. Number the answers according to the numbering system used in this question paper.
4. Sketches must be large, neat and fully labelled.
5. Use only a black or a blue pen.
6. Start each question on a new page.
7. Write neatly and legibly.

Copyright reserved

QUESTION 1: OCCUPATIONAL SAFETY

1.1 Referring to the Occupational Health and Safety Act of 1941, describe the regulations appertaining to:

1.1.1 Responsible person (4)

1.1.2 Selection and erection (2)

1.1.3 Projecting shaft ends (2)

1.2 What type of PPE would one wear when working on a bench grinder? (3)

[11]

QUESTION 2: STEELS AND TOOL STEELS

2.1 Explain TWO effects of nickel on steel. (2)

2.2 Give THREE properties of chrome on steel. (3)

2.3 The knowledge of engineering materials and the choice of the correct material for a particular job when doing tool making are very important.

Explain the meaning of the following properties of materials.

2.3.1 Tenacity

2.3.2 Compressibility

2.3.3 Brittleness

2.3.4 Elasticity

2.3.5 Malleability

(5 × 1) (5)

[10]

QUESTION 3: HEAT TREATMENT AND HARDNESS TESTING

3.1 With the aid of a neat, labelled sketch, explain the box method of heat treatment. (6)

3.2 Explain the term, *annealing*, with regard to heat treatment of metals. (3)

3.3 Name TWO types of hardness testing machines. (2)

[11]

Copyright reserved

QUESTION 4: LIMITS AND FITS

4.1 The ISO system allows for the types of fits and grades of tolerances.

Explain the meaning of each number and alphabet letter in the following tolerance:

17 H9 e9 (5)

4.2 Explain the following systems with regard to limits and fits:

4.2.1 Hole basis system (3)

4.2.2 Shaft basis system (2)

[10]

QUESTION 5: PRECISION MEASURING

5.1 Explain the use of a comparator. (3)

5.2 Give TWO disadvantages of a comparator. (2)

5.3 Give THREE uses of a sine bar. (3)

5.4 Give the THREE different types of sine bars. (3)

[11]

QUESTION 6: GAUGES

6.1 Write down ONE advantage and ONE disadvantage of a plug-and-ring gauge. (2)

6.2 Explain the use of a standard taper plug-and-ring gauge. (1)

6.3 Give ONE advantage and ONE disadvantage of a standard taper plug-and-ring gauge. (2)

6.4 Explain how a composite gauge is used and also give ONE advantage and ONE disadvantage of a composite gauge. (5)

[10]

Copyright reserved

QUESTION 7: JIGS AND FIXTURES

7.1 Explain the difference between a *jig* and a *fixture*. (4)

7.2 Name the parts indicated as 1 to 4 in FIGURE 1 below by writing only the answer next to the number (1–4) in the ANSWER BOOK.

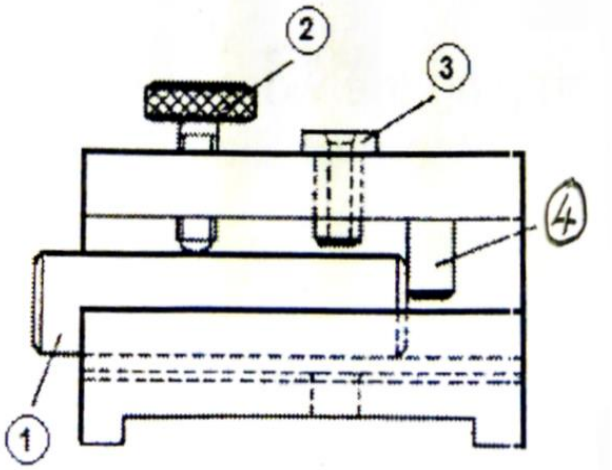

FIGURE 1 (4)

7.3 Draw a neat sketch of a hole-locator. (2)
[10]

QUESTION 8: CEMENTED CARBIDE TIP AND CUTTING TOOLS

8.1 The sketches in FIGURE 2 below show cutting tools labelled A to I. Name each tool by writing only the answer next to the letter (A–I) in the ANSWER BOOK.

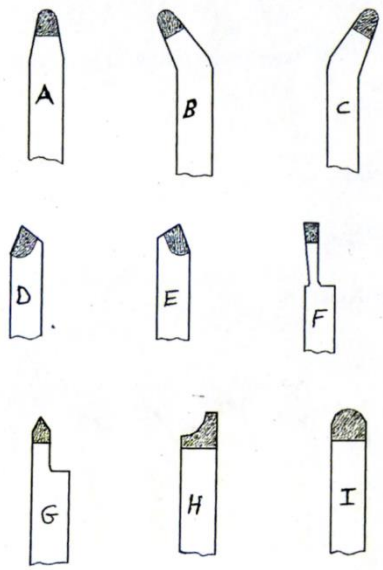

FIGURE 2

8.1.1 Left-hand radius.

8.1.2 Parting

8.1.3 Outside radius

8.1.4 To cut radius in groove

8.1.5 To cut outside thread

8.1.6 Right-hand radius

(6 × 1) (6)

8.2 Make neat and legible sketches of the following rake angles of cutting tools:

8.2.1 Positive rake

8.2.2 Zero or neutral rake

8.2.3 Negative rake

(3 × 1) (3)

8.3 Give TWO reasons why tungsten carbide tip tools are used for cutting work. (2)
[11]

QUESTION 9: DRILLS AND REAMERS

9.1 Name the different parts of a taper HSS drill labelled A to G in FIGURE 3 Below by writing only the answer next to the letter (A–G) in the ANSWER BOOK.

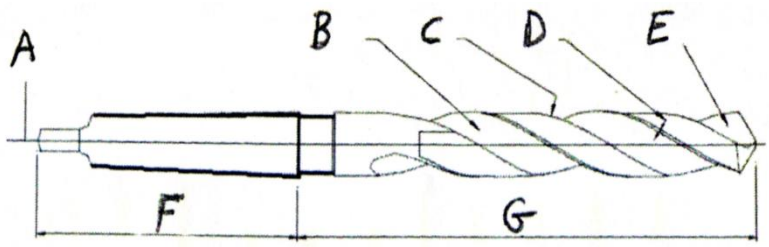

FIGURE 3

(7 × 1) (7)

9.2 Name FOUR types of reamers. (4)
[11]

QUESTION 10: DIE-SINKING AND FORGING

10.1 Draw a neat sketch of a split die. (2)

10.2 Give THREE methods that a toolmaker will use to forge small numbers of items or parts for manufacturing a die. (3)
[5]

TOTAL: 100

Copyright reserved

ADDENDUM 1

6. Table of primary fits (hole basis system) / *Tabel van primêre passings (gatbasisstelsel)*

Nominal sizes *Nominale groottes*		CLEARANCE FITS VRYPASSINGS										TRANSITION FITS OORGANGSPASSINGS				INTERFERANCE FITS STUITPASSINGS			
		Tolerance *Toleransie*		Tolerance *Toleransie*		Tolerance *Toleransie*		Tolerance *Toleransie*		Tolerance *Toleransie*		Tolerance *Toleransie*		Tolerance *Toleransie*		Tolerance *Toleransie*		Tolerance *Toleransie*	
Over *Oor* mm	To *Tot* mm	H11	c11	H9	d10	H9	e9	H8	f7	H7	g6	H7	h6	H7	k6	H7	n6	H7	p6	H7	s6
UNIT / *EENHEID* 0,001 mm																					
10	18	+ 110	- 95	+ 43	- 50	+ 43	- 32	+ 27	- 16	+ 18	- 6	+ 18	- 11	+ 18	+ 12	+ 18	+ 23	+ 18	+ 29	+ 18	+ 39
		0	- 205	0	- 120	0	- 75	0	- 34	0	- 17	0	0	0	+ 1	0	+ 12	0	+ 18	0	+ 28
18	30	+ 130	- 110	+ 52	- 65	+ 52	- 40	+ 33	- 20	+ 21	- 7	+ 21	- 13	+ 21	+ 15	+ 21	+ 28	+ 21	+ 35	+ 21	+ 48
		0	- 204	0	- 149	0	- 92	0	- 41	0	- 20	0	0	0	+ 2	0	+ 15	0	+ 22	0	+ 35
30	40	+ 160	- 120										- 16	+ 25	+ 18	+ 25	+ 33	+ 25	+ 42	+ 25	+ 59
		0	- 280	+ 62	- 80	+ 62	- 50	+ 39	- 25	+ 25	- 9	+ 25									
40	50	+ 160	- 130	0	- 180	0	- 112	0	- 50	0	- 25	0	0	0	+ 2	0	+ 17	0	+ 26	0	+ 43
		0	- 290																		

Copyright reserved

ADDENDUM 2

GAUGE BLOCK SETS

Set No. M105

Range or size (mm)	Increment in mm	No. of pieces
1,01 – 1,49	0,01	49
0,50 – 24,50	0,50	49
25 – 100	25	4
1,0025 – 1,0075	0,0025	3
	Total	105

Set No. M88

Range or size (mm)	Increment in mm	No. of pieces
1,001 – 1,009	0,001	9
1,01 – 1,49	0,01	49
0,5 – 9,5	0,5	19
10 – 100	10	10
1,0005	-	1
	Total	88

Set No. M78

Range or size (mm)	Increment in mm	No. of pieces
1,01 – 1,49	0,01	49
0,50 – 9,50	0,5	19
10, 20, 30, 40, 50, 75, 100	-	7
1,0025 – 1,0075	0,0025	3
	Total	78

Set No. M50

Range or size (mm)	Increment in mm	No. of pieces
1,0025 – 1,0075	0,0025	3
1,01 – 1,09	0,01	9
1,1 – 1,9	0,1	9
1 – 25	1	25
50 – 100	25	3
0,50	-	1
	Total	50

Set No. M45

Range or size (mm)	Increment in mm	No. of pieces
1,001 – 1,009	0,001	9
1,01 – 1,09	0,01	9
1,1 – 1,9	0,1	9
1 – 9	1	9
10 – 90	10	9
	Total	45

Copyright reserved