higher education & training

Department:
Higher Education and Training
REPUBLIC OF SOUTH AFRICA

MARKING GUIDELINE

NATIONAL CERTIFICATE

TOOLMAKERS' THEORY N2

28 November 2022

This marking guideline consists of 7 pages.

MJ

Copyright reserved

QUESTION 1: OCCUPATIONAL SAFETY

1.1 1.1.1 The person in charge of machinery shall:
- Be responsible for the safe installation, maintenance, repair and operation of the machinery.
- Ensure that all safety devices and guards are kept in good condition and are used properly.
- Ensure that all the regulations are fully complied with.
- Stop the working of any machine which may in any way be dangerous to persons due to defect. (4)

1.1.2 All appliances and machinery shall be selected, arranged, installed, adjusted,✓ worked and maintained in a manner that provides the workmen the best protection possible.✓ (2)

1.1.3 All projecting shaft or spindle ends within reach that project more than a quarter✓ of the shaft diameter is to be encased either by a cap or a shroud if it is not completely enclosed.✓ (2)

1.2
- Safety goggles/glasses
- Safety boots
- One or two-piece overall (3)

[11]

QUESTION 2: STEELS AND TOOL STEELS

2.1 Increases toughness,✓ hardness and resistance to corrosion✓ (2)

2.2
- Increased resistance to wear
- Increased resistance to shock
- Increased resistance to corrosion (3)

2.3 2.3.1 The power to resist fracture by a stretching force

2.3.2 The power to resist fracture by a pushing force

2.3.3 The property where metal breaks without deformation

2.3.4 The property where metal returns to its original shape after a applied force has been removed

2.3.5 The property of metal that resists fracture when permanently extended in all directions

(5 × 1) (5)

[10]

QUESTION 3: HEAT TREATMENT AND HARDNESS TESTING

3.1 The box method is the most effective method where workpieces are packed in a steel box containing a carbon rich compound.✓ The complete box is placed in the furnace at the required temperature above the upper critical temperature for a period of time depending on the depth of carbon penetration required on the workpiece surface.✓ When the box is removed from the furnace, the contents is emptied and the workpieces only are quenched in a suitable cooling medium.✓

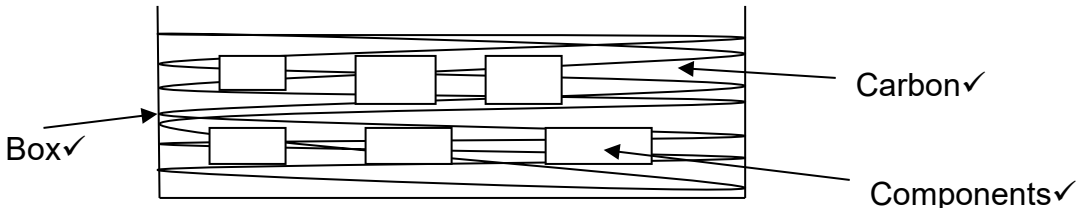

(6)

3.2 Annealing is a process where a hard steel is taken and returned to its original soft state✓ so that it can once again be cut or machined.✓ Here the already hard steel is taken and heated to a suitable temperature just above the upper critical temperature and then allowed to cool off as slowly as possible.✓ (3)

3.3 Rockwell tester
Brinell tester (2)

[11]

QUESTION 4: LIMITS AND FITS

4.1 17 = Nominal diameter
H = Tolerance on the hole
9 = Grade of tolerance on hole
e = Tolerance on the shaft
9 = Grade of tolerance on the shaft (5)

4.2 4.2.1 In the hole basis system, the hole is kept as close as possible to the basic size✓ and the shaft sizes are varied in order to obtain different types of fits.✓ This is the preferred type of system as it is more difficult to machine a hole to an odd size, thus the hole is simply machined to a standard size.✓ (3)

4.2.2 The shaft basis system is a system where the shaft is kept as close✓ as possible to the basic size and the hole sizes are varied in order to obtain different types of fits.✓ (2)

[10]

QUESTION 5: PRECISION MEASURING

5.1 As the name implies, the comparator compares actual component size to a standard set size.✓ Once set by adjusting the height of the dial test indicator,✓ the components are rolled or slid between the plunger and the table to determine if the component is within tolerance.✓ (3)

5.2
- Limited to small components
- Requires other instruments such as slip gauges to set it. (2)

5.3
- The sine bar is used to set up workpieces for marking off.
- The sine bar is used to set up workpieces for machining.
- The sine bar is used to set up work for checking. (3)

5.4
- The bar is stepped on both ends.
- One end of the bar is stepped and the other notched.
- There are plugs on both ends of the bar. (3)

[11]

QUESTION 6: GAUGES

6.1 **Advantage:**
Tells if a component is above or below tolerance

Disadvantage:
Cannot test limits
Cannot check ovality (2)

6.2 These are made to a set angle on the outside or in the bore. They are used to check if machined angles are correct. (1)

6.3 **Advantage:**
They can determine if the angles are correct.

Disadvantage:
Cannot determine whether major or minor diameters are correct. (2)

Copyright reserved

6.4 These gauges consist of a receiver gauge and subsidiary gauges.✓ Components to be checked with a receiver gauge are placed into the gauge against the locating blocks.✓ The subsidiary gauges are then placed between the component and the gauging blocks to check tolerances.✓

Advantage:
Can check a number of dimensions on a single component at once and all from the same reference points.✓

Disadvantage:
Costly to manufacture. Must be thoroughly cleaned before the component is loaded.✓ (5)
[10]

QUESTION 7: JIGS AND FIXTURES

7.1 Jig holds a workpiece in position✓ and also guide the cutting tool while the work-piece is being machined.✓

A fixture holds the workpiece in position.✓ It does not guide, locate or position the cutting tool. A fixture is fastened to the machine.✓ (4)

7.2 1 – Shaft
2 – Clamping screw
3 – Drill bush
4 – Locator or stopper (4)

7.2 Flange bush✓
Screwed bush✓

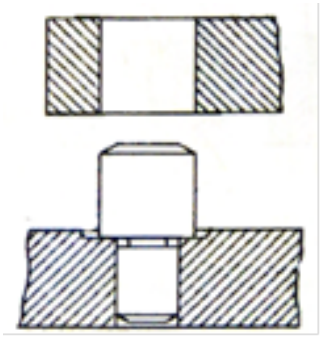

(2)
[10]

QUESTION 8: CEMENTED CARBIDE TIP AND CUTTING TOOLS

8.1
8.1.1 B
8.1.2 F
8.1.3 H
8.1.4 I
8.1.5 G
8.1.6 C

(6 × 1) (6)

Copyright reserved

8.2 8.2.1

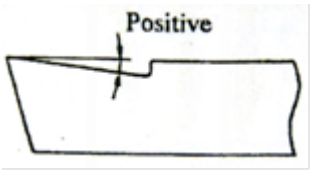

8.2.2

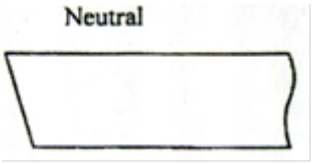

8.2.3

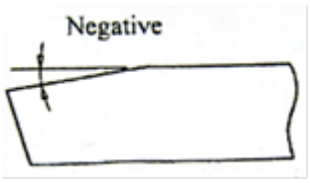

(3 × 1) (3)

8.3 It retains its cutting edge at a much higher temperature.✓ It makes higher cutting speeds possible.✓ (2)
[11]

QUESTION 9: DRILLS AND REAMERS

9.1 A = Drill axis
B = Flute
C = Heel
D = Land
E = Body clearance
F = Shank
G = Body (7)

9.2
- Hand reamer
- Machine reamer
- Finishing reamer
- Expanding reamer
- Adjustable reamer
- Chucking reamer

(Any 4 × 1) (4)
[11]

Copyright reserved

QUESTION 10: DIE-SINKING AND FORGING

10.1

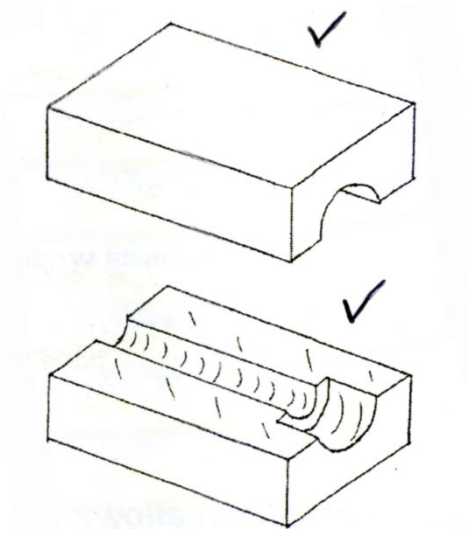

(2)

10.2
- Hand-held swages
- Swage blocks
- Anvil and hammers

(3)
[5]

TOTAL: 100

Copyright reserved