higher education & training

Department:
Higher Education and Training
REPUBLIC OF SOUTH AFRICA

MARKING GUIDELINE

NATIONAL CERTIFICATE

RADIO AND TELEVISION THEORY N2

24 November 2022

This marking guideline consists of 6 pages.

Copyright reserved

QUESTION 1

1.1	1.1.1	Faster	
	1.1.2	Chrominance	
1.2	1.2.1	Constant	
	1.2.2	AGC	
1.3	1.3.1	50 Hz	
	1.3.2	15 625 Hz	
1.4	1.4.1	Series	
	1.4.2	Impedance or Z	
1.5	1.5.1	Two or 2	
	1.5.2	An air gap /insulating material/dielectric material	(*Any* 1)
			(5 × 2) **[10]**

QUESTION 2

2.1

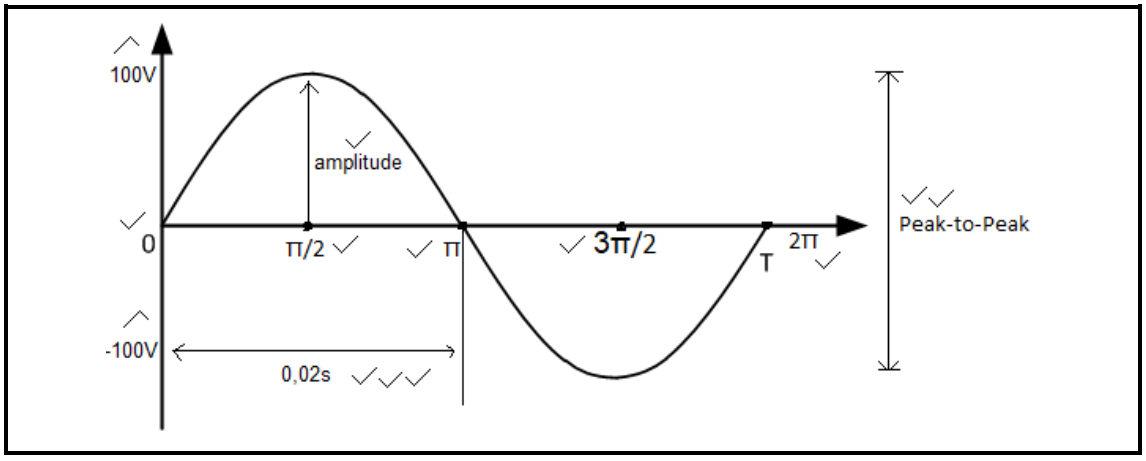

(12)

2.2	2.2.1	Maximum (peak) current✓ – ampere✓	
	2.2.2	Instantaneous current✓ – ampere✓	
	2.2.3	Frequency✓ – hertz✓	
	2.2.4	Time✓ – seconds✓	
			(4 × 2) (8)
			[20]

QUESTION 3

3.1 3.1.1 Low

3.1.2 High

3.1.3 Medium (± 1 kΩ)

3.1.4 Unity or less than 1

3.1.5 High

3.1.6 High

(6 × 1) (6)

3.2 3.2.1 $$f_r = \frac{1}{2\pi\sqrt{LC}} = \frac{1}{2\pi\sqrt{100\times10^{-3}\times100\times10^{-6}}}$$ ✓

$$= \frac{1}{2\pi 3{,}16227\times10^{-3}}$$

$$= 50{,}329Hz$$ ✓ (2)

3.2.2 $$X_L = 2\pi fL$$

$$= 2\pi\times50{,}329\times100\times10^{-3}$$

$$= 31{,}622\Omega$$ ✓

$$X_C = \frac{1}{2\pi fC} = \frac{1}{2\pi 50{,}329\times100\times10^{-6}}$$

$$= 31{,}622\Omega$$ ✓

$$\therefore X_L = X_C$$ ✓ (3)

3.2.3 At resonance Z = R

$$I = \frac{V}{R} = \frac{100}{100} = \underline{1A} \checkmark$$

$$V_L = I \times X_L = 1 \times 31{,}622 = \underline{31{,}622V} \checkmark$$

$$V_C = I \times X_C = 1 \times 31{,}622 = \underline{31{,}622V} \checkmark$$

$$V_R = 1 \times 100 = \underline{100V} \checkmark$$

(4)

3.2.4

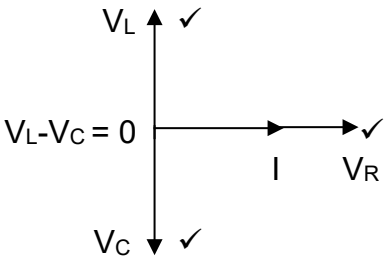

(3)

3.3 A, B or C (Any 2 × 1) (2)
[20]

QUESTION 4

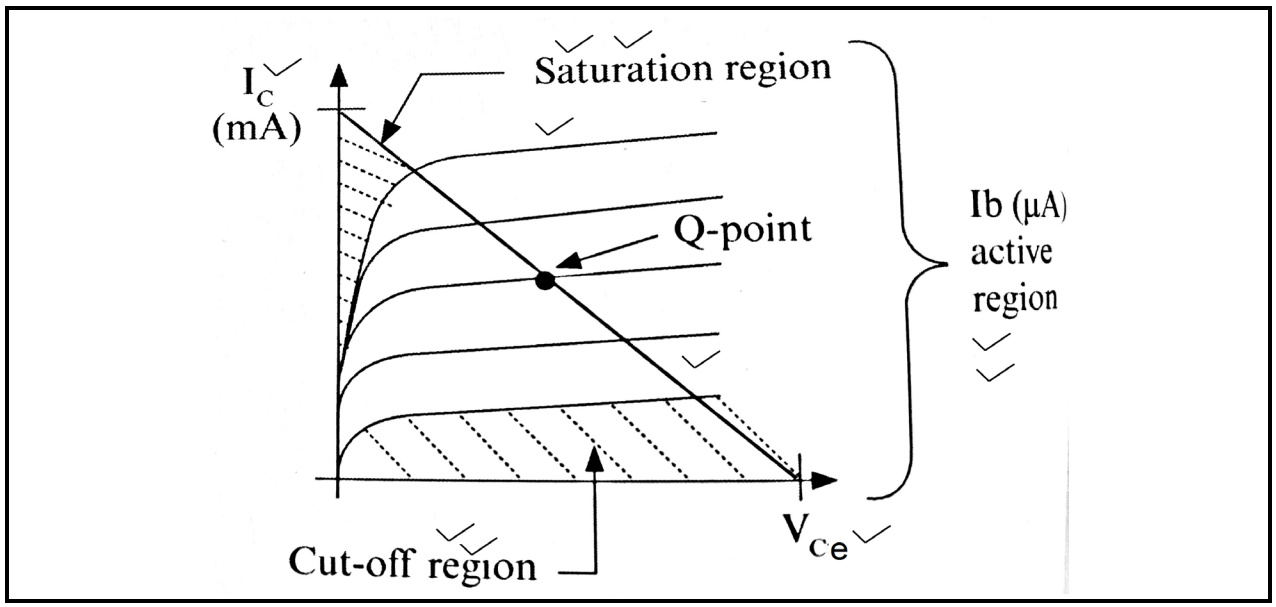

[10]

QUESTION 5

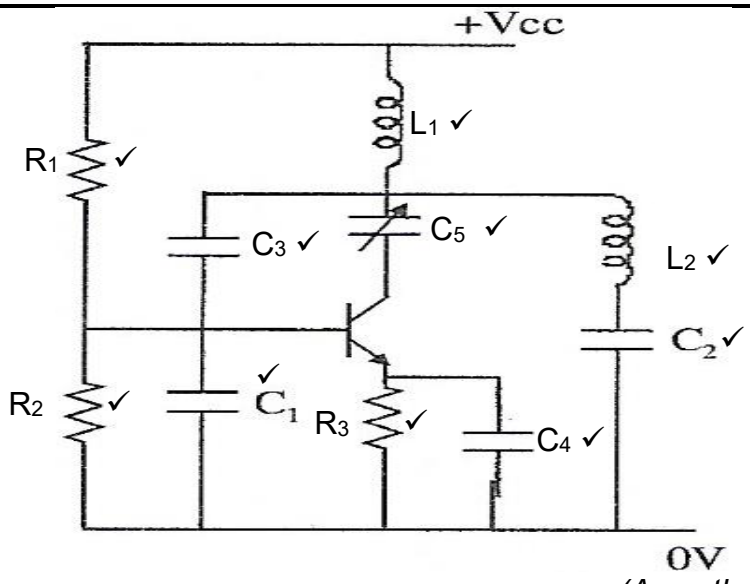

(Any other correct diagram) **[10]**

QUESTION 6

6.1 Because of the bandwidth limitations of the transmission channel, a special scanning method is used called interlaced scanning. ✓

Instead of the target in the camera tube and the TV tube being scanned in consecutive lines, ✓ the beam is made to scan all the odd-numbered lines in the order 1, 3, 5, 7, et cetera down to the bottom line. ✓ It then scans all even lines 2, 4, 6, 8, et cetera down to the end line of the raster. ✓ From there it goes back to the beginning of line 1 and the process is repeated.✓

It does two vertical sweeps of a raster ✓producing one complete picture on the screen.✓The first half produced by odd-line scanning ✓ and the second produced by even-line scanning. ✓ The first half picture is superimposed on the first. ✓

The number of half pictures presented is called the field frequency ✓ and the number of pictures presented in every second is called the picture frequency.✓ Note the field frequency is always double the picture frequency. (11)

6.2

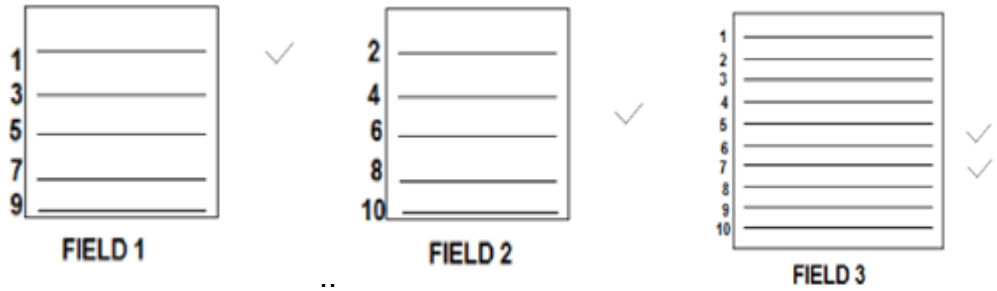

(4)
[15]

QUESTION 7

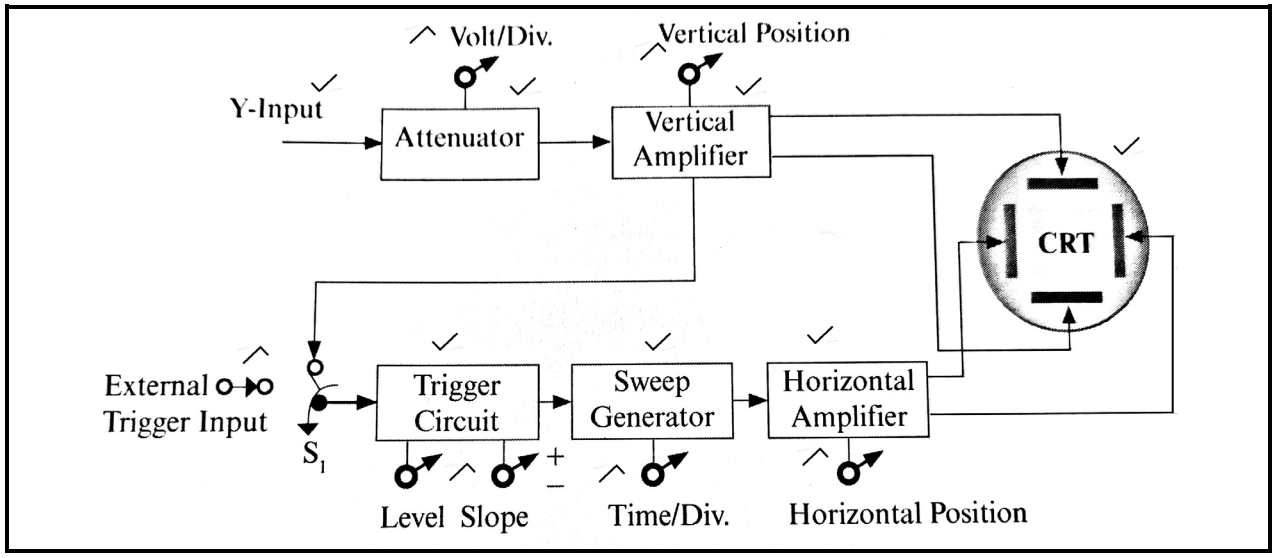

[10]

QUESTION 8

8.1 8.1.1 Field collapse or frame folding

8.1.2 Poor line hold, picture rolls vertically and horizontally. *(Any one)*

8.1.3 White line in the centre of the screen.

(3 × 1) (3)

8.2 Demodulation is the process of extracting the audio frequency (RF) from the radio frequency (RF) signal. (2)

[5]

TOTAL: 100

Copyright reserved