higher education & training

Department:
Higher Education and Training
REPUBLIC OF SOUTH AFRICA

MARKING GUIDELINE

NATIONAL CERTIFICATE

RADIO AND TELEVISION THEORY N2

1 December 2023

This marking guideline consists of 5 pages.

Copyright reserved

QUESTION 1

1.1 True
1.2 True
1.3 True
1.4 False
1.5 True
1.6 False
1.7 False
1.8 False
1.9 True
1.10 False

(10 × 1) **[10]**

QUESTION 2

2.1
- Current amplification
- Impedance matching

(2)

2.2
- Common emitter amplifier has 180° phase shift.
- Common base amplifier has no phase shift (zero phase shift).

(2)

2.3 2.3.1

$$f = \frac{\omega}{2\pi}$$

$$= \frac{628}{2\pi} \checkmark$$

$$= 100\ Hz \checkmark$$

(2)

2.3.2 $e = 200\ sin\ 2\pi ft$

$$= 200\ sin\left(2\pi \times \frac{180^0}{\pi} \times 100 \times 0{,}002\right) \checkmark$$

$$= 200\ sin\ 72^0 \checkmark$$

$$= 190{,}211\ V \checkmark$$

(3)
[9]

QUESTION 3

3.1 3.1.1 In a pure resistive circuit the voltage and current are always in phase and the phase angle (θ) is 0°.✓✓

3.1.2 In a capacitive circuit the current leads the voltage by an angle of 90°.✓✓

Copyright reserved

3.1.3 In an inductive circuit the voltage leads the current by an angle of 90°.✓✓

(3 × 2) (6)

3.2 3.2.1 $X_L = 2\pi FL$
$= 2\pi \times 60 \times 650 \times 10^{-3}$ ✓
$X_L = 245{,}044\ \Omega$ ✓ (2)

3.2.2 $X_C = \frac{1}{2\pi FC}$
$= \frac{1}{2\pi \times 60 \times 1{,}5 \times 10^{-6}}$ ✓

$X_C = 1\ 768{,}388\ \Omega$ ✓ (2)

3.2.3
$Z = \sqrt{R^2 + (X_C - X_L)^2}$

$Z = \sqrt{250^2 + (1\ 768{,}388 - 245{,}044)^2}$ ✓

$Z = 1\ 543{,}722\ \Omega$ ✓

$I_T = \frac{V_S}{Z}$
$= \frac{120}{1\ 543{,}722}$ ✓

$I_T = 0{,}078$ A **OR** 78 mA ✓ (4)

3.2.4 $\cos\theta = \frac{R}{Z} = \frac{250}{1543{,}722}$ ✓ $= 0{,}16$ ✓ (2)

3.3 Impedance is the total opposition to the flow of current in an AC circuit✓ caused by resistance and reactance.✓ (2)
[18]

QUESTION 4

4.1 The output is developed over the R_c resistor.✓ (1)

4.2 R_{b1} and R_{b2} provide a voltage divider network which supplies a stable bias voltage to the base of the transistor.✓✓ (2)

4.3 R_e is used to limit the current through the transistor to prevent thermal runaway.✓✓ (2)

4.4 The capacitor C_e, supplies a constant DC potential to the emitter resistor.✓✓ (2)

4.5 NPN transistor is used to amplify the input signal.✓ (1)

4.6 C_1 couples the input signal to the amplifier. It also blocks DC.✓
C_2 couples the output signal to the load.✓ (2)
[10]

QUESTION 5

5.1

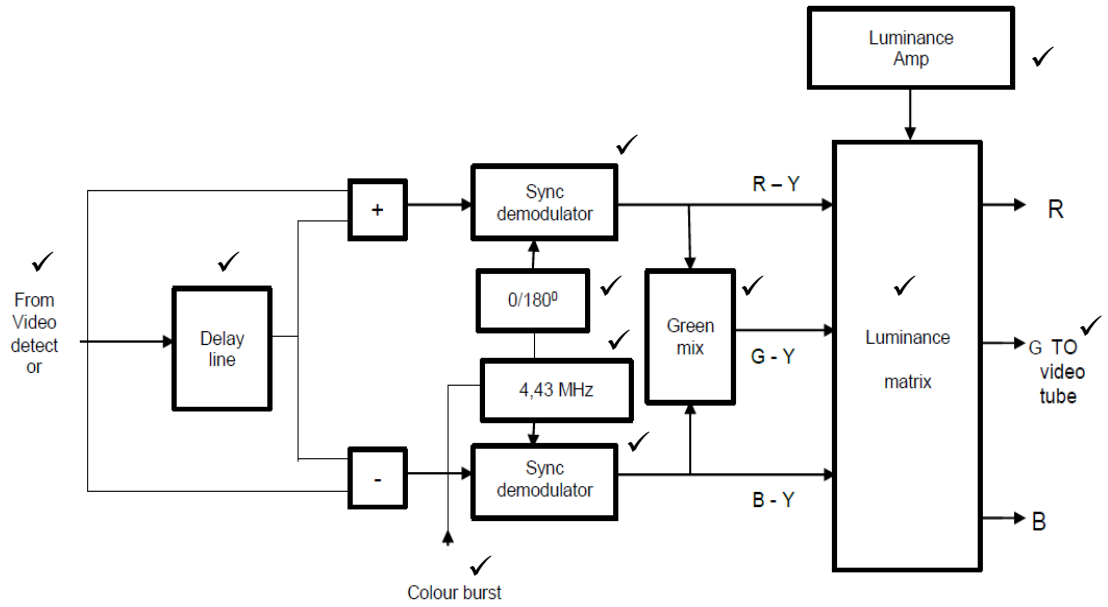

(11)

5.2
- Crosshatch patterns✓ – for geometric settings ✓
- Vertical stripes✓ – for field oscillator adjustments ✓
- Horizontal stripes✓ – for line oscillator adjustments ✓
- Dot patterns✓ – for focusing adjustments ✓
- Colour bars✓ – for colour adjustments ✓
- Raster✓ – grey-scale adjustments ✓ (12)

[23]

QUESTION 6

6.1
- High sensitivity over the full range
- Auto-ranging facility provided
- More robust against mechanical shock
- Immediate reading – no interpretation of scale needed
- Overload indication
- No parallax errors
- Reversal of leads compensated for (Any 4 × 1) (4)

6.2 6.2.1 Cathode ray tube (1)

6.2.2 A = First anode (Pre anode)
B = Third anode (Accelerator anode)
C = Y-plates
D = X-plates
E = Aquadag coating
F = Fluorescent screen or phosphor screen
G = EHT
H = Second anode (Focus anode)
I = Control grid
J = Filament heater
K = Cathode (11 × 1) (11)
[16]

QUESTION 7

7.1 The electron gun emits high velocity electrons✓ that strike the phosphorescent screen.✓

7.2 This amplifier measures quantity✓ to a suitable level to cause sufficient vertical deflection.✓

7.3 This amplifier amplifies the measured quantity✓ to a suitable level to cause sufficient horizontal deflection.✓

7.4 The time-base generator causes the spot✓ to move from left to right across the screen.✓

7.5 The purpose of the delay line is to delay the input signal at the vertical deflection plates✓ until the trigger and time-based circuit provide the next sweep of the beam.✓

7.6 The trigger circuit provides✓ the time-based circuits with pulse.✓

7.7 This is a voltage and current source✓ that supplies the CRO with sufficient power to operate effectively.✓

(7 × 2) **[14]**

TOTAL: 100

Copyright reserved