higher education & training

Department:
Higher Education and Training
REPUBLIC OF SOUTH AFRICA

NATIONAL CERTIFICATE

RADIO AND TELEVISION THEORY N2

(11040832)

1 December 2023 (X-paper)
09:00–12:00

Drawing instruments and nonprogrammable calculators may be used.

This question paper consists of 6 pages and a 2-page formula sheet.

227Q1G2301

Copyright reserved

DEPARTMENT OF HIGHER EDUCATION AND TRAINING
REPUBLIC OF SOUTH AFRICA

NATIONAL CERTIFICATE
RADIO AND TELEVISION THEORY N2
TIME: 3 HOURS
MARKS: 100

INSTRUCTIONS AND INFORMATION

1. Answer all the questions.
2. Read all the questions carefully.
3. Number the answers according to the numbering system used in this question paper.
4. Use only a blue or black pen.
5. Diagrams should be neat and clear and a pencil may be used.
6. Write neatly and legibly.

Copyright reserved

QUESTION 1

Indicate whether the following statements are TRUE or FALSE by writing only 'True' or 'False' next to the question number (1.1–1.10) in the ANSWER BOOK.

1.1 The notch filter is only operative during colour transmission.

1.2 The current gain for a transistor connected in the common-emitter mode is high.

1.3 An NPN transistor only has three terminals.

1.4 Oscillators use negative feedback.

1.5 Another name for the tuner in a TV receiver is front end.

1.6 Crystal oscillators are popular because of their low sensitivity.

1.7 In a series circuit consisting of R, L and C, the impedance is equal to $\sqrt{R + (XL – XC)}$.

1.8 Capacitors provide low impedance at low frequencies.

1.9 Capacitors can be either polarised or non-polarised.

1.10 Class A amplifiers are more efficient than class B amplifiers.

(10 × 1) **[10]**

QUESTION 2

2.1 Give TWO applications of a common collector amplifier. (2)

2.2 Compare a *common emitter amplifier* with a *common base amplifier* with regard to phase shift between the input and output signal. (2)

2.3 The voltage equation for a circuit is e = 200 sin 628 t

Determine the following:

2.3.1 The frequency (2)

2.3.2 The instantaneous value of the voltage after 2 ms. (3)

[9]

Copyright reserved

QUESTION 3

3.1 What is the relationship between voltage and current in each of the following AC circuits:

3.1.1 Pure resistive circuit

3.1.2 Capacitive circuit

3.1.3 Inductive circuit

(3 × 2) (6)

3.2

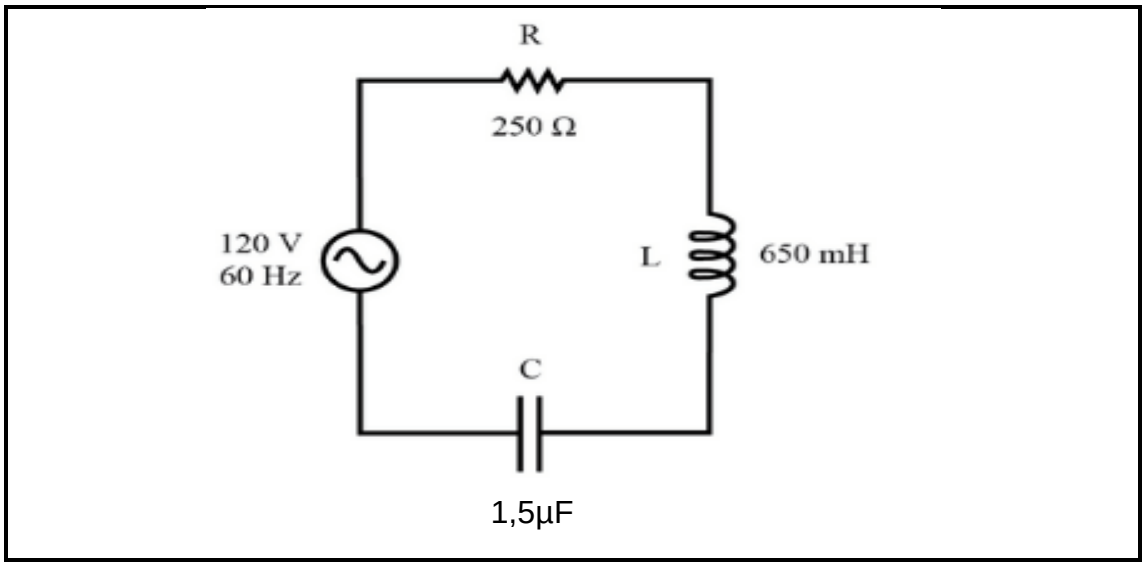

FIGURE 1

Refer to FIGURE 1 to determine the following:

3.2.1 The inductive reactance (X_L) (2)

3.2.2 The capacitive reactance (X_c) (2)

3.2.3 The supply current of the circuit (4)

3.2.4 The phase angle (2)

3.3 Define the term, *impedance*. (2)

[18]

QUESTION 4

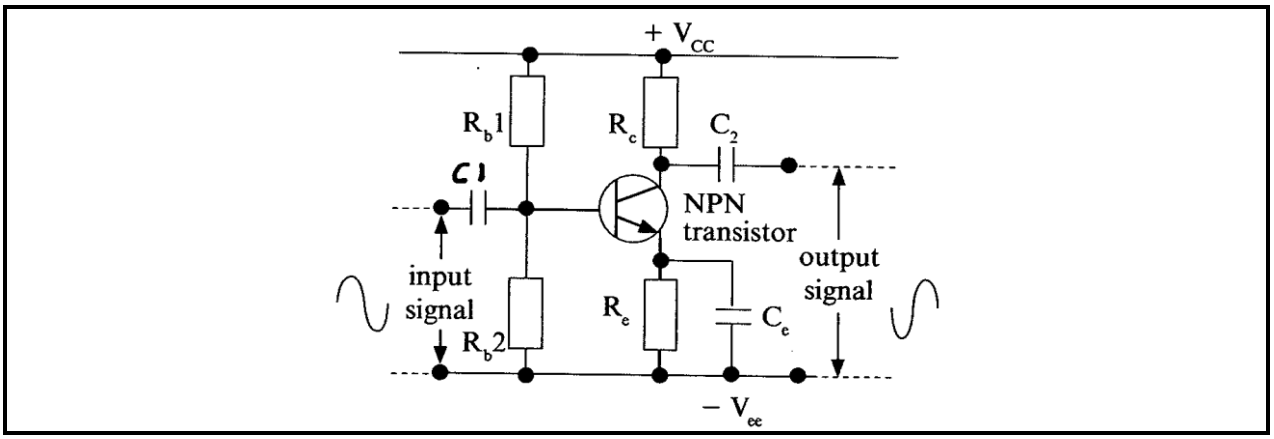

FIGURE 2

Explain the function of each of the following regarding the common-emitter amplifier shown in FIGURE 2:

4.1	R_c	(1)
4.2	R_{b1} and R_{b2}	(2)
4.3	R_e	(2)
4.4	C_e	(2)
4.5	NPN transistor	(1)
4.6	C_1 and C_2	(2)
		[10]

QUESTION 5

5.1	Draw a neat, labelled block diagram of a chrominance decoder.	(11)
5.2	Name and explain SIX general patterns that can be generated by a pattern generator. (6 × 2)	(12)
		[23]

QUESTION 6

6.1	State FOUR advantages of a digital multi meter.	(4)

6.2 Refer to the sketch in FIGURE 3 below to answer the questions that follow:

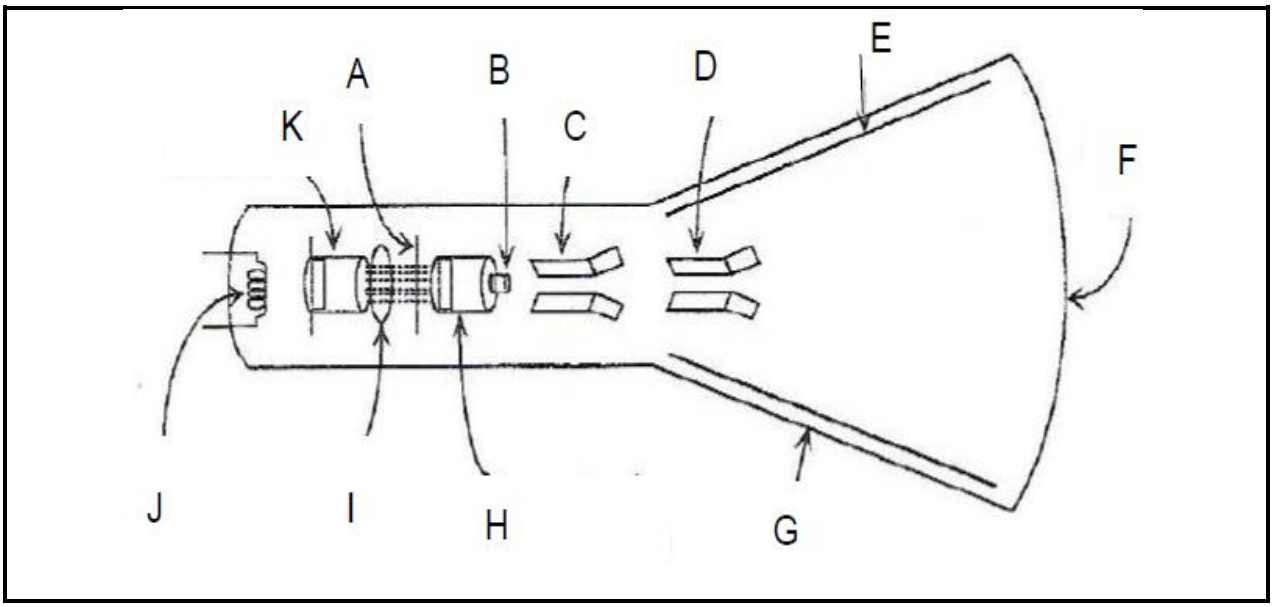

FIGURE 3

6.2.1 Identify the sketch. (1)

6.2.2 Identify the parts labelled A to K in FIGURE 3. Write only the answer next to the letter (A–K) in the ANSWER BOOK. (11 × 1) (11)

[16]

QUESTION 7

Give a short description of each of the following main subsections of an oscilloscope:

7.1 The cathode-ray tube

7.2 The vertical amplifier

7.3 The horizontal amplifier

7.4 The time-base generator

7.5 The delay line

7.6 The trigger circuit

7.7 The power-supply unit

(7 × 2) **[14]**

TOTAL: 100

Copyright reserved

RADIO THEORY N2

Capacitors, resistors and inductors

$$\frac{1}{C_T} = \frac{1}{C_1} + \frac{1}{C_2} + ...$$

$$C_T = C_1 + C_2 + ...$$

$$R_T = R_1 + R_2 + ...$$

$$\frac{1}{R_T} = \frac{1}{R_1} + \frac{1}{R_2} + ...$$

$$\frac{1}{L_T} = \frac{1}{L_1} + \frac{1}{L_2} + ...$$

$L_T = L_1 + L_2 + \ldots$

$$R_{SH} = \frac{I_m x R_m}{I_T - I_m}$$

$$R_S = \frac{V}{I_m} - R_m$$

Instantaneous voltage across a capacitor

$$V_C = V\left(1 - e^{\frac{-t}{RC}}\right)$$

Initial charging current through a capacitor

$$i = \frac{V}{R} \times e^{\frac{-t}{RC}}$$

Time constant $\tau = R \times C$

Charge of capacitor $Q = C \times V$

AC THEORY

Inductive reactance $X_L = 2.\pi.F.L$

Capacitive reactance $X_C = \frac{1}{2.\pi.F.C}$

Copyright reserved

Impedance for RL, RC and RLC circuits

$$Z = \sqrt{R^2 + X_L{}^2} : Z = \sqrt{R^2 + X_C{}^2} : Z = \sqrt{R^2 + (X_L \approx X_C)^2}$$

Circuit current for RL, RC and RLC circuits

$$I_T = \frac{V_T}{X_L} : \qquad I_T = \frac{V_T}{X_C} : \qquad I_T = \frac{V_T}{Z}$$

Voltage drop across components

$$V_R = I \times R : V_L = I \times X_L : V_C = I \times X_C$$

Power factor $\cos\theta = \frac{R}{Z}$

Phase angle $\phi = \cos^{-1}\frac{R}{Z}$

Resonant frequency $f_r = \frac{1}{2.\pi.\sqrt{LC}}$

Q-factor $Q = \frac{1}{R}\sqrt{\frac{L}{C}}$

OHM'S LAW

Voltage drop $V = I \times R$

Circuit current $I = \frac{V}{R}$

OSCILLOSCOPE CALCULATIONS

Period = Time/Division × Horizontal divisions

Amplitude = Volts/Division × Vertical divisions

Frequency = $\frac{1}{Period}$

RMS voltage = 0,707 × Peak

Average voltage = 0,637 × Peak

Voltage (peak-to-peak) = 2 × Peak

Copyright reserved