higher education & training

Department:
Higher Education and Training
REPUBLIC OF SOUTH AFRICA

MARKING GUIDELINE

NATIONAL CERTIFICATE

RADIO THEORY N2

23 November 2022

This marking guideline consists of 7 pages.

Copyright reserved

QUESTION 1

1.1 True
1.2 True
1.3 False
1.4 False
1.5 False
1.6 True
1.7 True
1.8 False
1.9 False
1.10 True

(10 × 1) **[10]**

QUESTION 2

2.1 $X_L = 2\pi fL$
$= 2 \times \pi \times 50 \times 2$
$= 628,319\ \Omega$

$Z = \sqrt{R^2 + {X_L}^2}$
$= \sqrt{600^2 + 628,319^2}$
$= 868,783\ \Omega$

$I_T = \frac{V_T}{Z}$
$= \frac{250}{868,783}$
$= 0,288\ A$

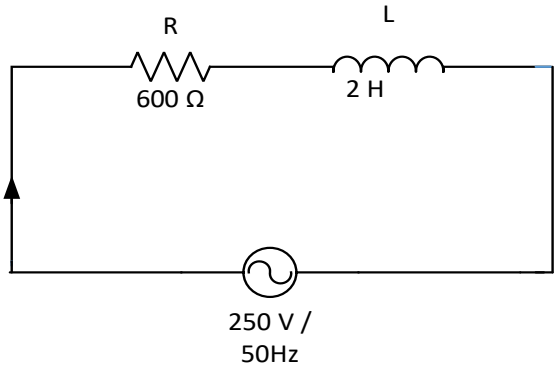

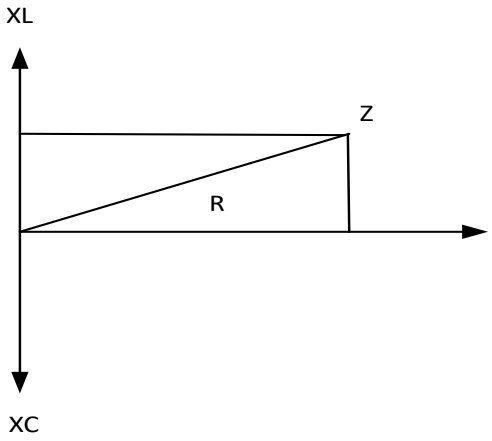

(7)

2.2 2.2.1 $\text{Peak} = \frac{\text{RMS}}{0,707}$
$= \frac{25}{0,707}$
$= 35,361\ V$

2.2.2 $\text{RMS} = \text{Vp x } 0,707$
$= 35,361 \text{ x } 0,707$
$= 25 \text{ V}$

2.2.3 $\text{Wave length} = \text{velocity/frequency} = 3 \text{ x } 10 / 50$
$= 6 \text{ x } 10$

2.2.4 $\text{Generation time: } t = \frac{1}{\text{frequency}} = \frac{1}{50}$
$= 0,02 \text{ s or } 20 \text{ ms}$

2.2.5 Propagation distance: $\text{Velocity} = \frac{\text{frequency}}{\text{wavelength}} = 50 \text{ x } 6 \text{ x} 10$
$= 3 \text{ x } 10 \text{ m/s}$

(5 × 2) (10)
[17]

QUESTION 3

3.1
- Multimeter
- Oscilloscope
- Signal generator
- Audio generator

(Any 3 × 1) (3)

3.2
- When measuring alternating current, the meter has a bridging loss, i.e., take power from the circuit.
- If an alternating current passes into a D'Asonval movement, the reversals of current would upset the instrument. To measure alternating current, a copper oxide rectifier is placed in the instrument. This converts the alternating current to direct current that will be measured by the meter.
- The direct current output of the rectifier is proportional to the alternating current input. A rectifier offers high resistance to the flow of current in one direction and a low resistance in the opposite direction, and will give a pulsating direct current to the output of the meter. Electronic rectifiers of copper oxide cannot be used to measure high frequency (hf) of an alternating current because heat is generated. (3 × 2) (6)

[9]

QUESTION 4

4.1 It is a circuit that will increase the electrical current flowing in a circuit to a magnitude that will drive the speaker. (2)

4.2

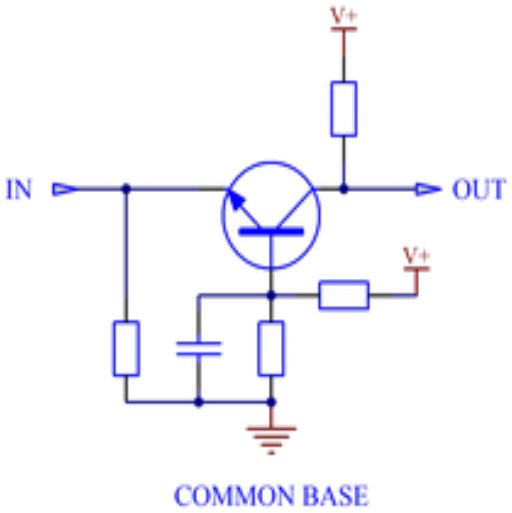

COMMON BASE

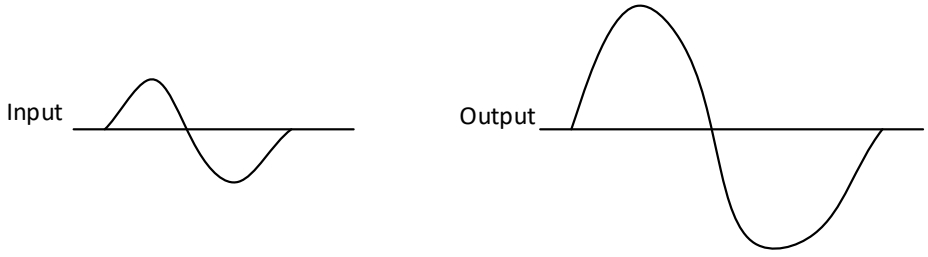

(8)

4.3 Voltage references or voltage regulator (2)

[12]

QUESTION 5

5.1 A – Antenna
B – RF amplifier
C – Mixer
D – Local oscillator
E – IF amplifier
F – Limiter
G – Demodulator
H – Audio amplifier
I – Loudspeaker
J – Power supply

(10 × 1) (10)

5.2 AM modulation is the process by which the amplitude of a carrier wave is made to vary in accordance with the instantaneous value of the modulating signal. (2)
[12]

QUESTION 6

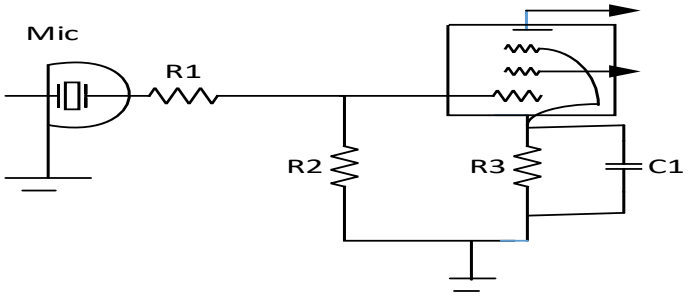

CRYSTAL MICROPHONE

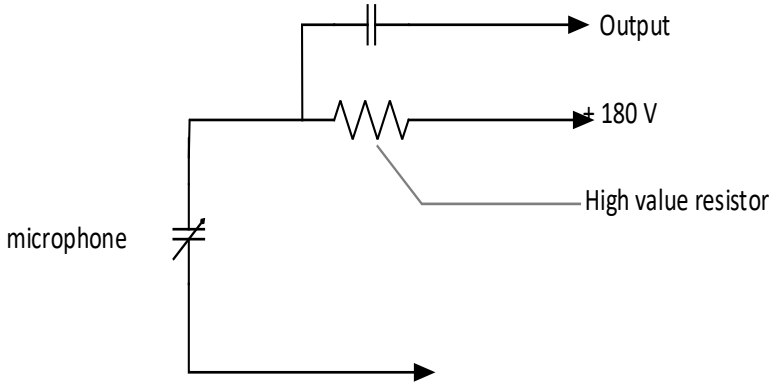

CAPACITOR MICROPHONE

Crystal mic: Crystal plate is similar to the capacitor and has an internal impedance. When stress is applied across, it creates a potential across two faces. It vibrates mechanically to govern the frequency of an oscillator (crystal quartz). Give a high electrical output.

Capacitor mic: The diaphragm is at the back so that the vibrations of the former appear as capacitance. This mic is not a primary generator of power but produces an AF electrical output. The charge on the capacitor microphone remains constant. **[12]**

QUESTION 7

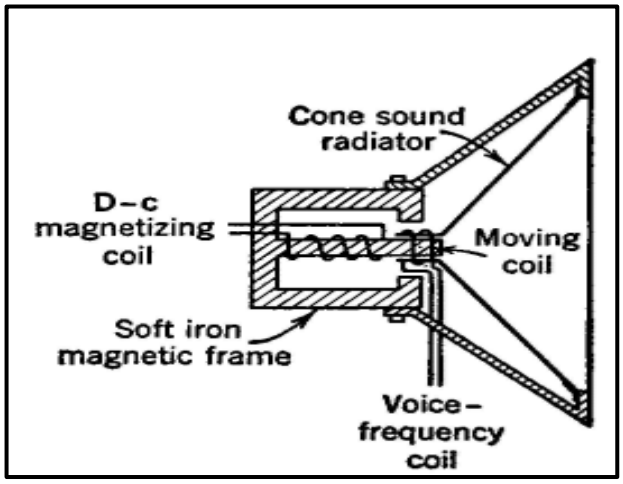

MOVING COIL SPEAKER

Speakers work by converting electrical energy into mechanical energy (motion). The mechanical energy compresses air and converts the motion into sound energy or sound pressure level (SPL). When an electric current is sent through a coil of wire, it induces a magnetic field. **[13]**

QUESTION 8

8.1
- Measure AC and DC voltage
- Study waveform
- Time measurement (frequency)
- Phase displacement
- Aligning IF frequencies
- Study distortion
- Indicating amplifier gain (Any 5 × 1) (5)

8.2
- Intermittent condition: Is a condition that occurs at certain periods and then returns to original state.
- Open circuit: This is a condition where a component is not soldered or solder comes loose. This is also when no current flows in the circuit.

(2 × 3) (6)

8.3

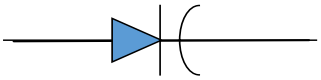

Varactor diode
Application: Used in tuning circuits (4)
[15]

TOTAL: 100

Copyright reserved