higher education & training

Department:
Higher Education and Training
REPUBLIC OF SOUTH AFRICA

MARKING GUIDELINE

NATIONAL CERTIFICATE

RADIO THEORY N2

30 November 2023

This marking guideline consists of 6 pages.

Copyright reserved

QUESTION 1

1.1 Positive
1.2 Parallel
1.3 Remove
1.4 Sound
1.5 Electrical
1.6 Reverse and forward
1.7 Current
1.8 Direct
1.9 Reverse
1.10 Amplitude

(10 × 1) **[10]**

QUESTION 2

2.1 2.1.1 $V_{p-p} = 2V_{max}$
$= 2 \times 150$ ✓
$= 300 \text{ volts}$ ✓ (2)

2.1.2 $2\pi f = 314,159$
$\therefore f = \frac{314,159}{2 \times \pi}$ ✓
$= 50 \text{ Hz}$ ✓ (2)

2.1.3 $2\Theta = 2\pi ft$
$= (314{,}159 \text{ x } 0{,}015) \text{x } (180/\pi)$ ✓
$= 270^0$ ✓ (2)

2.1.4 $e = Em \sin \Theta$
$= 150 \sin 90^0$ ✓
$= 150 \text{ volts}$ ✓ (2)

2.1.5 $e = E_{max} \sin\{(2\pi ft)(180/\pi)\}$ ✓
$= 150 \times \sin\{(2 \times \pi \times 50 \times 16,5 \times 10^{-3}) \times (180/\pi)$ ✓
$= 150 \times \sin 270°$ ✓
$= -133,651 \text{ volts}$ ✓ (4)

2.2 $X_L = X_L$
Z = and maximum
Θ = 0º
Q = 1
I_T = minimum
$V_L = V_L$ (Any 4 × 1) (4)
[16]

QUESTION 3

3.1
- Parallax error
- Width of the scale pointer
- Vibration of the pointer
- Accuracy of the scales
- Zero calibration
- Number of ranges
- Errors due to non-horizontal use of the mechanical display (Any 5 × 1) (5)

3.2
- An electron gun
- A focusing and accelerating unit
- A scan or deflection system
- A phosphor screen
- An evacuated glass envelope (Any 3 × 1) (3)

3.3
- Multimeter
- AF Signal generator
- RF Signal generator
- Function signal generator
- Spectrum analyser
- Sweep generator
- Signal injector
- Signal tracer (Any 5 × 1) (5)

[13]

QUESTION 4

4.1 4.1.1

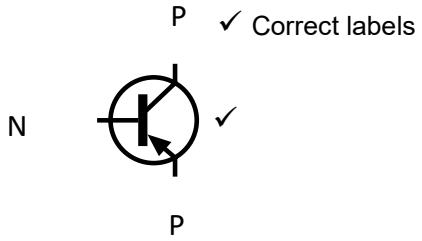

PNP TRANSISTOR

4.1.2

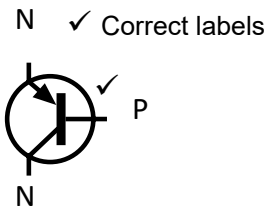

NPN TRANSISTOR

4.1.3

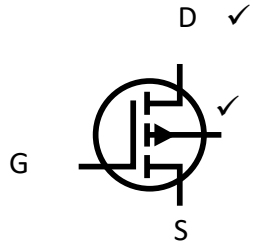

MOSFET P- CHANNEL

4.1.4

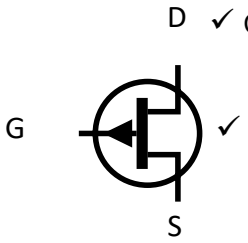

JFET N-CHANNEL

(4 × 2) (8)

4.2

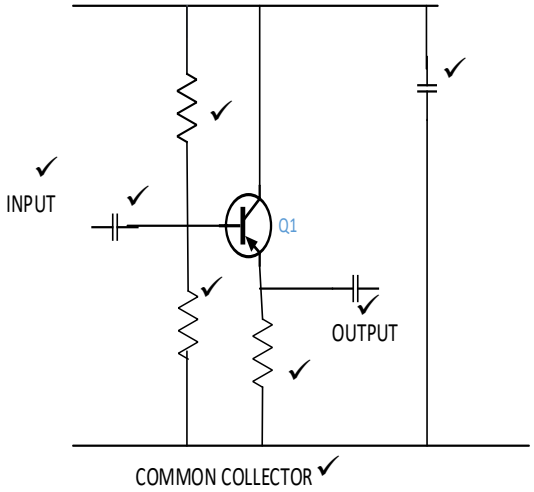

(8)
[16]

QUESTION 5

5.1 If any undesired signal is present, the limiter removes the amplitude variation by 'clipping' the top and bottom interference✓ and will not lose the original intelligence. ✓ (2)

5.2

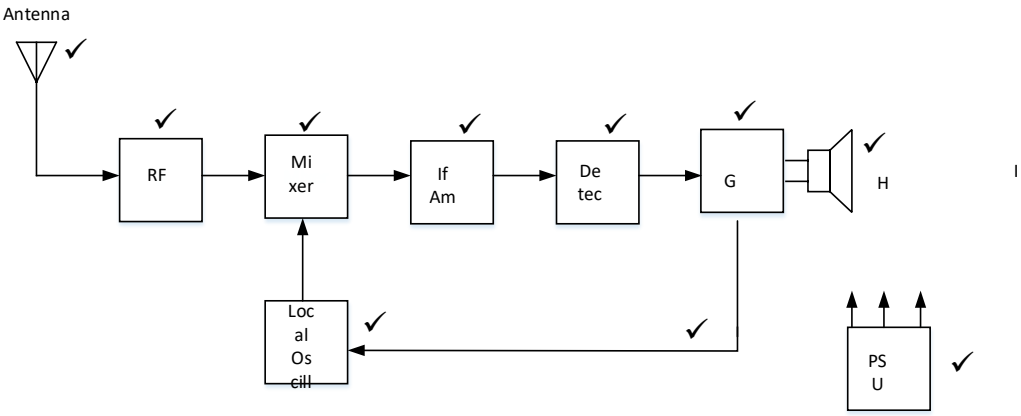

SUPERHETERODYNE RECEIVER (10)

5.3 Modulation is the process of combining audio frequencies✓ onto a carrier frequency.✓ (2)

[14]

QUESTION 6

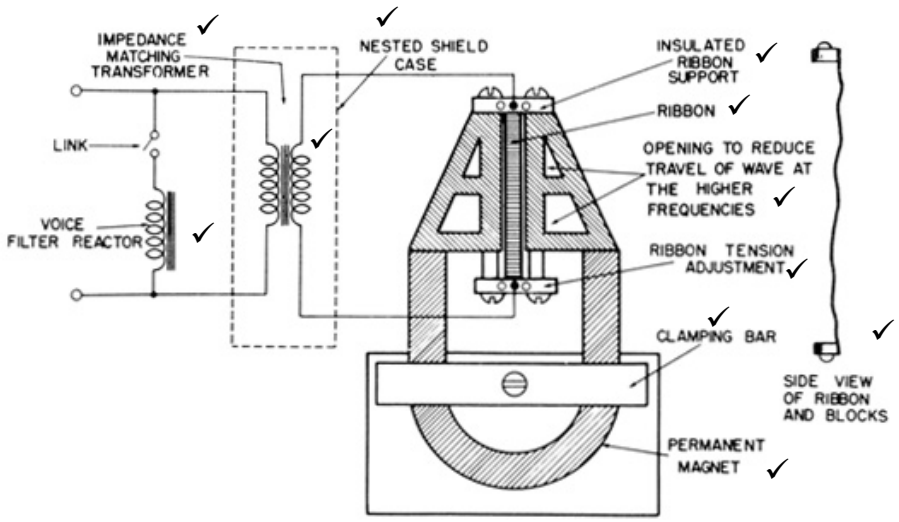

[11]

QUESTION 7

7.1

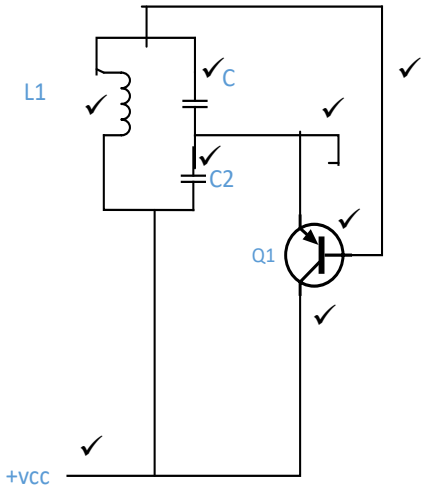

COLPITT'S OSCILLAT (8)

7.2 Germanium diode = 0,3 V
Silicon diode = 0,6 V (2)
[10]

QUESTION 8

8.1 Class – A amplification
Class – B amplification
Class – C amplification
Class – AB amplification (4)

8.2 The signal from the detector is blocked,✓ therefore, there will be no sound at the output of the audio amplifier (dead).✓ The audio amp will not be able to drive the speaker.✓ (3)

8.3
- Mains transformer
- Auto transformer
- Radio frequency transformer (3)

[10]

TOTAL: 100

Copyright reserved