higher education & training

Department:
Higher Education and Training
REPUBLIC OF SOUTH AFRICA

**NATIONAL CERTIFICATE**

# PLATERS' THEORY N2

(11022182)

**24 November 2022 (X-paper)**
**09:00–12:00**

**Drawing instruments and nonprogrammable calculators may be used.**

**This question paper consists of 5 pages, 1 addendum and a diagram sheet of 2 pages.**

223Q1E2224

Copyright reserved

# DEPARTMENT OF HIGHER EDUCATION AND TRAINING
# REPUBLIC OF SOUTH AFRICA

NATIONAL CERTIFICATE
PLATERS' THEORY N2
TIME: 3 HOURS
MARKS: 100

---

**INSTRUCTIONS AND INFORMATION**

1. Answer all the questions.
2. Read all the questions carefully.
3. Number the answers according to the numbering system used in this question paper.
4. Start each section on a new page.
5. Use only a blue or black pen.
6. Write neatly and legibly.

---

Copyright reserved 

## QUESTION 1: MACHINES

1.1 Briefly describe the working principle of the radial power saw. (2)

1.2 Briefly state the use of the pedestal grinding machine. (3)

1.3 FIGURE 1, DIAGRAM SHEET 1 (attached), shows a box and pan folding machine.

List FIVE parts that correspond with the letters as indicated on the diagram. Write only the answer next to the letter (A–E) in the ANSWER BOOK. (5)
**[10]**

## QUESTION 2: ROLLING AND BENDING

2.1 FIGURE 2, DIAGRAM SHEET 1 (attached), shows a top view of an angle-iron frame.

Calculate the length of the angle iron required to manufacture the frame. (5)

2.2 The heel diameter of a 100 mm × 100 mm × 6 mm internal angle-iron ring is 1,7 m.

Calculate the length, in millimetres, of the angle iron required to form the ring. Use the formula given below:

$$L = [D - T - (T \div 3)]\ \pi$$

Where: L = Length of the angle iron
D = Heel diameter of the angle iron
T = Thickness of an angle iron (5)
**[10]**

## QUESTION 3: JOINING OF ROLLED-STEEL SECTION

3.1 Illustrate, by means of a freehand drawing, the method for joining a channel iron to a rolled-steel joist at 90°. (3)

3.2 FIGURE 3, DIAGRAM SHEET 1 (attached), shows two plate edges with a wide gap between them.

Describe, with the aid of sketch, a simple device (made from scrap metal available in the workshop) that can be used to bring the plate edges closer together for welding. (4)

3.3 List THREE advantages of using a well-designed assembly jig in a welding workshop. (3)
**[10]**

Copyright reserved 

## QUESTION 4: GENERAL PIPE WORK

4.1 FIGURE 4, DIAGRAM SHEET 1 (attached), shows an outside view of a centre finder. Name the parts marked A to D by only writing the correct answer next to the letter (A–D) in the ANSWER BOOK. (4)

4.2 FIGURE 5, DIAGRAM SHEET 2 (attached), shows a pipe reducer.

Briefly describe how to mark a pipe for cutting when fabricating a pipe reducer. (6)
**[10]**

## QUESTION 5: STEEL STRUCTURE

FIGURE 6, DIAGRAM SHEET 2 (attached), shows part of a steel roof truss.

List SIX parts that correspond with the letters as indicated on the diagram. Write only the answer next to the letter (A–F) in the ANSWER BOOK. **[6]**

## QUESTION 6: TEMPLATES

6.1 Make a freehand isometric drawing of RSC with a box template in position. (4)

6.2 Name TWO uses of the template. (2)
**[6]**

## QUESTION 7: METALS

7.1 Name TWO elements which can be used to alloy carbon steel. (2)

7.2 Explain how the following heat treatments can be applied to steel:

7.2.1 Annealing

7.2.2 Tempering

(2 × 3) (6)
**[8]**

## QUESTION 8: GAS WELDING AND CUTTING

8.1 What is the difference between *oxy-acetylene gas welding* and *brazing*? (3)

8.2 Name FIVE metals that can be cut with a plasma cutter. (5)

8.3 Explain the use of an oxy-acetylene profile cutter. (2)
**[10]**

Copyright reserved 

## QUESTION 9: ARC WELDING

9.1 Describe, with the aid of freehand drawings, the meaning of the following welding terms:

9.1.1 Bevel angle

9.1.2 Gap

9.1.3 Deposited metal

9.1.4 Weld sequence

9.1.5 Spatter

(5 × 2) (10)

9.2 Briefly explain the following welding terms:

9.2.1 Groove angle

9.2.2 Bevel angle

(2 × 2) (4)

**[14]**

## QUESTION 10: CALCULATION AND PLANNING

FIGURE 7, DIAGRAM SHEET 2 (attached), shows the design for a welded angle-iron frame.

Copy the material list in TABLE 1 (ADDENDUM, attached) to the ANSWER BOOK and complete it. Fill in the quantities, total lengths and mass of all the members, as well as the total mass of the materials for the welded angle-iron frame. **[16]**

**TOTAL: 100**

Copyright reserved

**ADDENDUM: TABLE 1**

| ITEM | QUANTITY | MATERIAL | LENGTH | Kg/m | TOTAL MASS |
|---|---|---|---|---|---|
| 1 | | RSC 100 × 50 | | 11,0 | |
| 2 | | RSA 60 × 60 × 8 (100 long) | | 6,6 | |
| 3 | | RSA 50 × 50 × 6 | | 5,5 | |
| 4 | | RSA 50 × 50 × 6 | | 5,5 | |
| 5 | | RSC 100 × 50 | | 11,0 | |
| | | | | **TOTAL** | |

**[16]**

Copyright reserved

## DIAGRAM SHEET 1

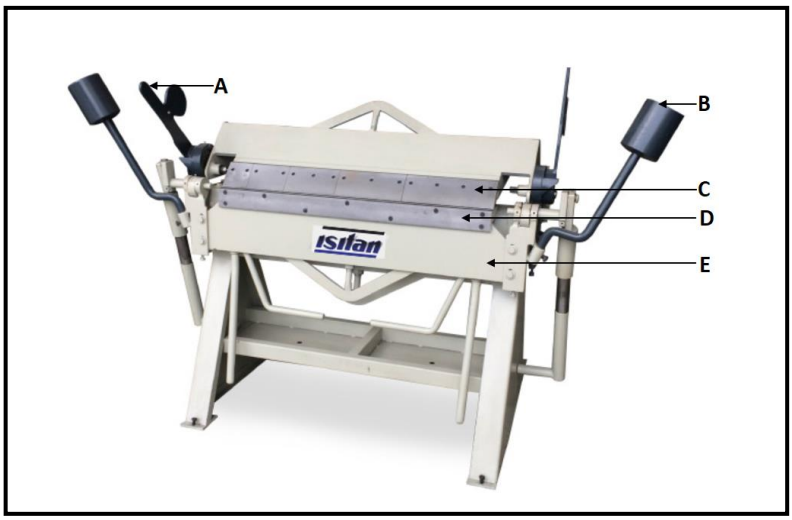


**FIGURE 1**

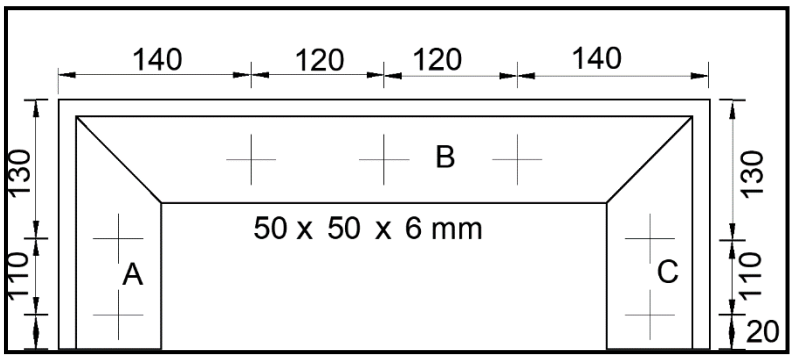


**FIGURE 2**

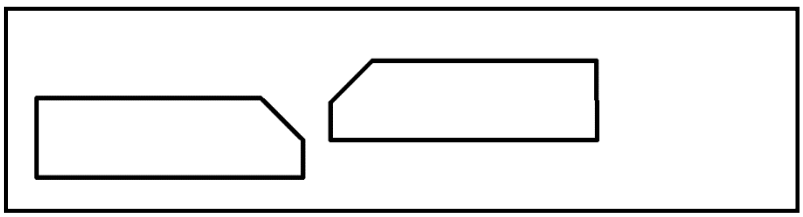

**FIGURE 3**

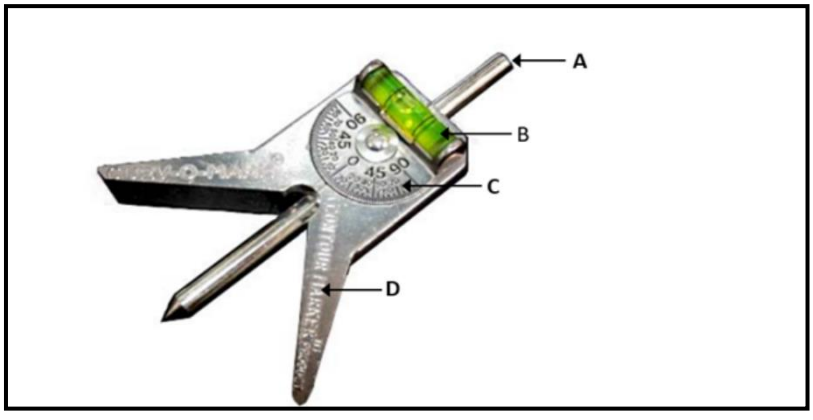


**FIGURE 4**

Copyright reserved 

## DIAGRAM SHEET 2

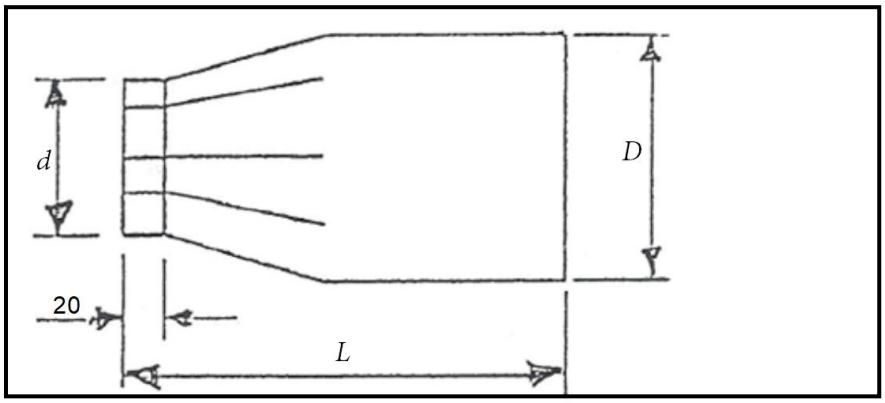


**FIGURE 5**

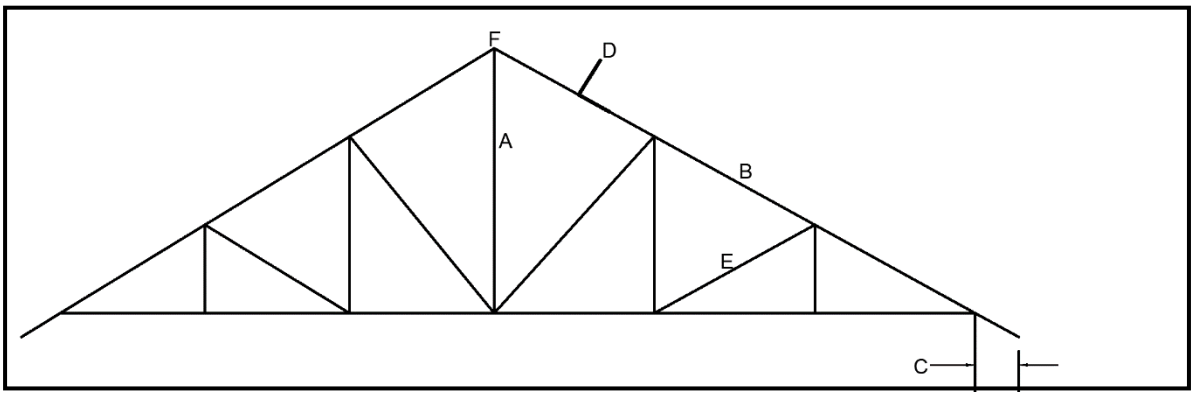


**FIGURE 6**

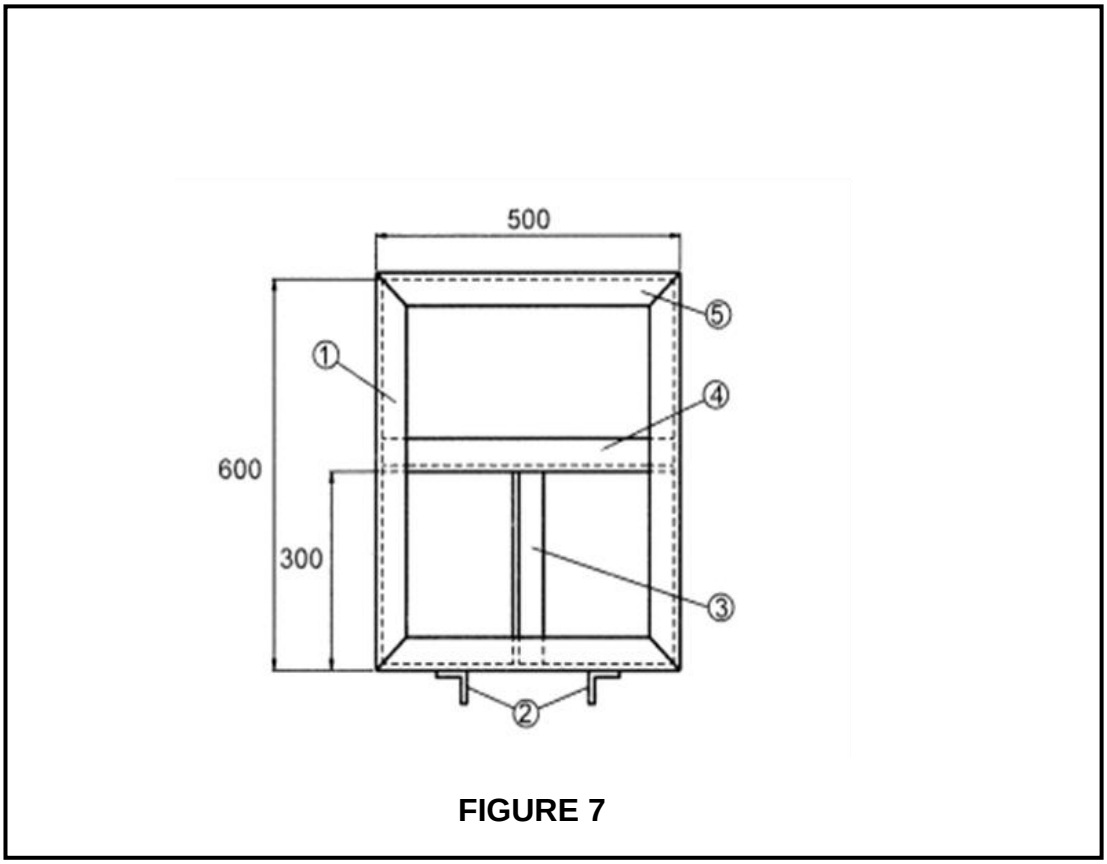


**FIGURE 7**

Copyright reserved