higher education & training

Department:
Higher Education and Training
REPUBLIC OF SOUTH AFRICA

MARKING GUIDELINE

NATIONAL CERTIFICATE

PLATERS' THEORY N2

24 November 2022

This marking guideline consists of 7 pages.

Copyright reserved

QUESTION 1: MACHINES

1.1 It cuts bars and sections✓ by means of a high-speed rotating blade.✓ (2)

1.2 The main function of this machine is to sharpen tools and drills.✓ It is also used for removing rough edges✓ and excess material.✓ (3)

1.3 A – Clamping beam
B – Balancing weight
C – Segmental top blade
D – Bending beam
E – Swing beam (5)
[10]

QUESTION 2: ROLLING AND BENDING

2.1 A = 260 – 6
= 254 mm✓

B = (520 – 12)
= 508 mm✓

C = 260 – 6
= 254 mm✓

Total length = A + B + C
= 254 + 508 + 254✓
= 1 016 mm✓ (5)

2.2 $L = (D - T - T \div 3) \times \pi$
✓ ✓
$= (1700 - 6 - 6 \div 3) \times \pi$
= 5315,57 mm✓✓✓ (5)
[10]

QUESTION 3: JOINING OF ROLLED-STEEL SECTION

3.1

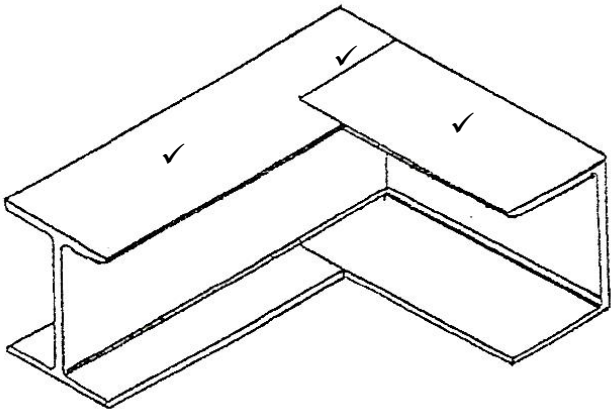

(3)

3.2

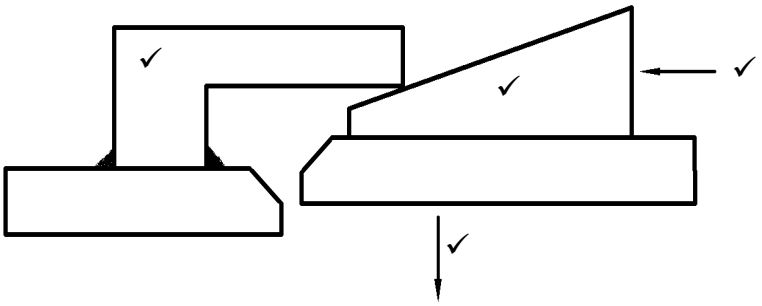

(4)

3.3
- It saves unnecessary measuring.
- Assembly time is reduced.
- Enables untrained workers to do the work.
- Reduces distortion.
- Assembled items are identical.
- It reduces the cost of production.
- A jig can be stored for long periods of time and used again.
- Workers can do the work alone.

(Any 3 × 1) (3)

[10]

QUESTION 4: GENERAL PIPE WORK

4.1 A – Centre punch
B – Spirit level
C – Protractor
D – V-shaped frame (4)

4.2
- Determine the centre line on the pipe, and draw lines P, Q, R, and O at 90° to the centre line.
- Measure the circumference of the pipe, divide it by 6, and mark the sizes parallel to the centre line.
- Determine the circumference of the small pipe, subtract it from the circumference of the lager pipe, and divide it by 12 to obtain size S.
- Use size S to mark off both sides of the six parallel lines, and draw lines from O to R diagonally from A to Z.
- Cut V's and heat along the line R, then bend the ends outwards.
- Heat along line Q, and use a hammer to knock in each of the six segments to form a diameter equal to that of the smaller pipe. (6)

[10]

QUESTION 5: STEEL STRUCTURES

A – King post
B – Rafter
C – Eave/Overhang
D – Purlin
E – Strut
F – Apex/Peak **[6]**

QUESTION 6: TEMPLATES

6.1

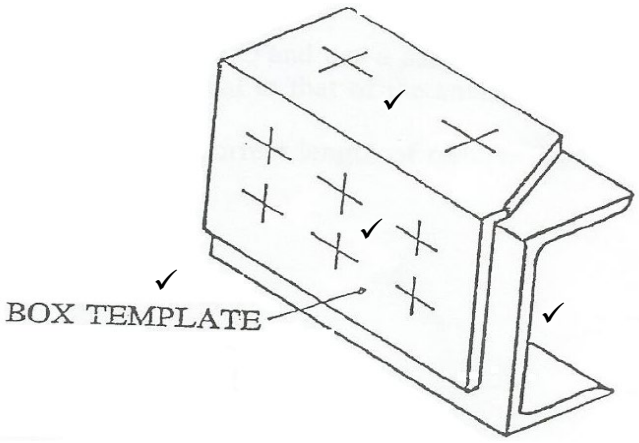

(4)

6.2
- To avoid unnecessary wastage of material.
- To avoid repetitive measuring and marking-off of the same dimensions when a number of identical parts are required. (2)

[6]

QUESTION 7: METALS

7.1
- Chrome
- Nickel
- Manganese
- Vanadium
- Silicon (Any 2 × 1) (2)

7.2 7.2.1 Annealing is done by slowly heating the steel to a temperature slightly above its critical temperature.✓ The steel is then left at that temperature to 'soak' for a short time✓ before being allowed to cool down, very slowly, inside the furnace.✓

7.2.2 The steel is heated in its hardened state to a suitable tempering temperature, which is lower than that for hardening.✓ The steel is then quenched in water or oil.✓ The tempering temperature depends on the carbon content of the steel and the purpose for which the steel is going to be used.✓

(2 × 3) (6)
[8]

QUESTION 8: GAS WELDING AND CUTTING

8.1 In oxy-acetylene gas welding, the filler rod and base metal are melted✓ to form a solid unit; in brazing, the base metal is only heated to a certain temperature✓ while the filler rod is being melted so that it adheres to the base metal.✓ (3)

8.2
- Mild steel
- Alloy steel
- Stainless steel
- Cast iron
- Copper (5)

8.3 The machine is used to gas-cut one or more identical items✓ and is mechanically driven.✓ (2)
[10]

Copyright reserved

QUESTION 9: ARC WELDING

9.1 9.1.1

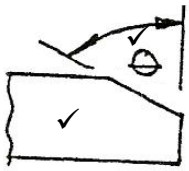

9.1.2

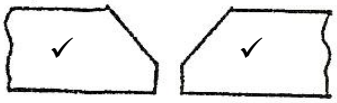

9.1.3

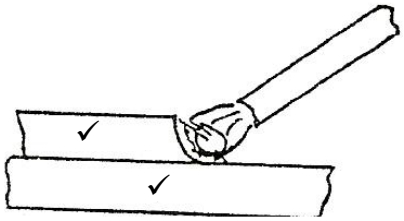

9.1.4

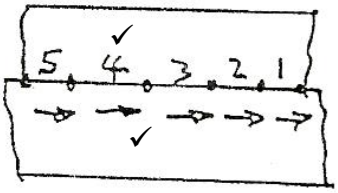

9.1.5

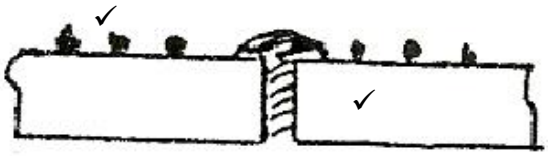

(5 × 2) (10)

9.2 9.2.1 The total angle✓ of the groove between the parts to be welded.✓

9.2.2 The angle formed between the prepared edge of a member✓ and a plane perpendicular to the surface of the member.✓

(2 × 2) (4)

[14]

QUESTION 10: CALCULATION AND PLANNING

TABLE 1

MARK	QUANTITY	MATERIAL	LENGTH	Kg/m	TOTAL MASS
1	2 ✓	RSC 100 × 50	1,2✓	11,0	13,2 kg✓
2	2 ✓	RSA 60 × 60 × 8 (100 long)	0,2✓	6,6	1,32 kg ✓
3	1 ✓	RSA 50 × 50 × 6	0,3✓	5,5	1,65 kg✓
4	1✓	RSA 50 × 50 × 6	0,5✓	5,5	2,75 kg✓
5	2 ✓	RSC 100 × 50	1,0✓	11,0	11,00 kg✓
				TOTAL	29,92 kg✓

[16]

TOTAL: 100

Copyright reserved