higher education & training

Department:
Higher Education and Training
REPUBLIC OF SOUTH AFRICA

MARKING GUIDELINE

NATIONAL CERTIFICATE

PLATERS' THEORY N2

1 December 2023

This marking guideline consists of 5 pages.

Copyright reserved

QUESTION 1: MACHINES

1.1
- Ensure the machine is switched off before making any adjustments.
- Ensure that the job is properly fixed in the vice.
- Do not cut hard metals.
- Keep the area clean around the machine. (2 × 1) (2)

1.2 Cropping machine is used for square or bevel-cutting angles and tee bars✓ to the required length✓ based on information from cutting list.✓ (3)

1.3
A Blade
B Shoe
C Vents
D Trigger
E Handle

(5 × 1) (5)
[10]

QUESTION 2: ROLLING AND BENDING

2.1 L = (D + T + T ÷ 3) × 3.142

= (2470 + 6 + 6 ÷ 3) × 3.142✓✓

= (2478) × 3.142✓

= 7 785.876 mm✓✓ (5)

2.2 Rolling is the process of shaping material✓ into round or oval shapes✓, for example, large rings and cylinders, using motorised or hand-driven rollers ✓, whereas bending is the process of shaping sharper corners ✓ and straight sides ✓. (5)
[10]

QUESTION 3: JOINING OF STEEL SECTION

3.1
- It must be easily understood.
- It must be rigid.
- It must be light and easy to handle.
- It must be accurate.
- It must not be expensive to make.
- It must hold the parts to be assembled and allow them to be removed from the jig.

(Any 4 × 1) (4)

3.2 A jig is a device used for the attachment,✓ securement,✓ and correct alignment of parts.✓ (3)

3.3

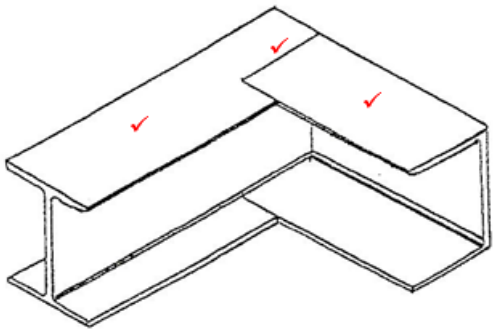

(3)
[10]

QUESTION 4: GENERAL PIPE WORK

4.1

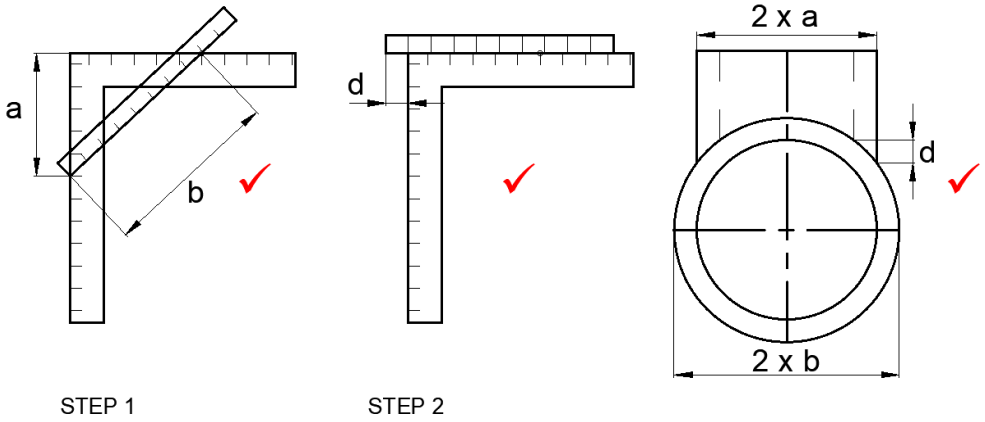

STEP 1 STEP 2

- Inside radius of small pipe✓
- Inside radius of large pipe✓
- Saddle depth✓ (6)

4.2 A Centre punch
B Sprit level
C Protractor
D V-shaped frame

(4 × 1) (4)
[10]

QUESTION 5: STEEL SRUCTURE

5.1 We fix purlins to the truss chords at right angles to support roof sheeting✓. The purlins also provide lateral restraint to the roof structure✓.

5.2 Purlin cleats are shaped metal fasteners✓ that we use to secure a purlin to the rafter✓.

5.3 Gusset plates are thick plates of steel✓ that we use to connect truss members✓. (3 × 2) **[6]**

QUESTION 6: TEMPLATES

6.1 For outlining of small bent shapes,✓ for example, brackets, small pipes bends, and for developing patterns for sheet metal work.✓

6.2 Light steel plate fitted with drilling bushes is used as template for batch drilling of large gusset plate.

6.3 Timber is used for making a template for use with an oxy-fuel gas profile machine.

(3 × 2) **[6]**

QUESTION 7: METALS

7.1 To soften the metal, refine the grain size,✓ and remove any stress that may be present.✓ (2)

7.2 7.2.1
- Increases the hardness.
- Increases brittleness.
- Less resistant to impact. (Any 2 × 1) (2)

7.2.2
- Resistance to wear.
- Increases hardness.
- Refines the grain structure. (Any 2 × 1) (2)

[6]

QUESTION 8: GAS WELDING AND CUTTING

8.1 Flame cleaning nozzles spread the heating flame✓ so that mill scale, oxide paint and grease can be removed from the surface of the work piece.✓ (2)

8.2
- The nozzle is blocked.
- The nozzle is held too close to the work piece.
- The regulator pressure is incorrectly set.
- The nozzle overheats.
- Foreign particles enter the tip and impede gas flow. (5 × 1) (5)

8.3 The parent metal is not melted,✓ but instead the filler rod melts during the fusion process.✓ (2)

8.4 8.4.1 Oxygen is the gas responsible for causing combustion.

8.4.2 Oxy-acetylene is the process in which oxygen and acetylene are mixed, to become a source of heat.

8.4.3 Sustained backfire is the gas entering the nozzle or torch and continues burning inside with a hissing noise.

(3 × 1) (3)

[12]

QUESTION 9: ARC WELDING

9.1 9.1.1 Penetration is the distance the weld metal fuses into the root of the joint.

9.1.2 Run is the metal deposited✓ during one passage of the electrode.✓

9.1.3 Welding face is the surface of a weld✓ seen from the side from which the weld was made.✓

9.1.4 Bevel angle is the angle formed between the prepared edge of a member✓ and a plane perpendicular to the surface of the member.✓

9.1.5 Undercutting is the term used when the metal penetrates through the base metal,✓ burning through it.✓

(5 × 2) (10)

9.2
- Excessive welding current
- Electrode at incorrect angle
- Insufficient supply of filler material
- Excessive wave
- Arc length too long (5 × 1) (5)

[15]

QUESTION 10: CALCULATION AND PLANNING

10.1 = 10.6 × 1.8
= 19.08 kg✓✓ (2)

10.2

MARK	QUANTITY	MATERIAL	LENGTH	Kg/m	TOTAL MASS
A	1✓	50 × 50 × 6 mm	3600 mm	4.47	11.622✓
B	1✓	50 × 50 × 6 mm	4500 mm	4.47	15.645✓
C	1✓	50 × 50 × 6 mm	4900 mm	4.47	17.433✓
D	1✓	50 × 50 × 6 mm	8000 mm	4.47	31.29✓
E	1✓	50 × 50 × 6 mm	7000 mm	4.47	26.82✓
F	1✓	50 × 50 × 6 mm	4400 mm	4.47	15.645✓
				TOTAL	118.455✓

(13)

[15]

TOTAL: 100

Copyright reserved