higher education & training

Department:
Higher Education and Training
REPUBLIC OF SOUTH AFRICA

NATIONAL CERTIFICATE

MOTOR TRADE THEORY N2

(11040662)

24 November 2022(X-Paper)
09:00–12:00

Drawing instruments may be used.

This question paper consists of 8 pages.

219Q1E2224

Copyright reserved

DEPARTMENT OF HIGHER EDUCATION AND TRAINING
REPUBLIC OF SOUTH AFRICA

NATIONAL CERTIFICATE
MOTOR TRADE THEORY N2
TIME: 3 HOURS
MARKS: 100

INSTRUCTIONS AND INFORMATION

1. Answer ALL the questions.
2. Read ALL the questions carefully.
3. Number the answers according to the numbering system used in this question paper.
4. Sketches must be large, neat, and fully labelled.
5. Use only a blue or black pen.
6. Write neatly and legibly.

Copyright reserved

QUESTION 1

1.1 Various options are given as possible answers to the following questions. Choose the answer and write only the letter (A–D) next to the question number (1.1.1–1.1.10) in the ANSWER BOOK.

1.1.1 Under which condition will the rear wheels of a vehicle lock when the brake pedal is applied?

A Under-inflated tyres.
B Too much brake pressure on the front wheels.
C Incorrect adjustment of brake linings.
D A leak on the hydraulic system.

1.1.2 What is the function of a universal joints used in motor vehicles?

A Multiply torque transmitted from the gearbox.
B Transmit drive through 90˚.
C Allow the prop-shaft to move through an angle and maintaining rotation.
D Allow for extension and compression of the prop-shaft.

1.1.3 If the intake valve is not seated correctly, ……..

A The Compression pressure increases.
B Air will escape past the valve into the exhaust system.
C The engine will overheat.
D Air will escape pass the valve into the intake manifold.

1.1.4 When first gear is selected on a rear-wheel-drive vehicle, power flows from the …

A Main shaft- cluster gear- first gear- synchro sleeve- input shaft- synchro hub
B Main shaft- first gear- cluster gear- synchro sleeve- input shaft- synchro hub
C Input shaft - cluster gear- first gear- synchro sleeve- -synchro hub - main shaft
D Input shaft - first gear- synchro sleeve- -synchro hub - cluster gear - main shaft

1.1.5 Which component in the air conditioning system of a vehicle is a flow control device that cause refrigerant pressure and temperature to drop, cooling the evaporator?

A Compressor
B Expansion Valve
C Evaporator
D Accumulator

Copyright reserved

1.1.6 The correct measuring tool to check the cylinder head thickness is:

A Vernier calliper
B Outside micrometer
C Inside micrometer
D Feeler gauge and steel ruler

1.1.7 The fixed calliper on a disc brake system has……..

A Two hydraulic pistons.
B One hydraulic piston.
C Four brake pad blocks.
D A fixed calliper that rotates, during braking.

1.1.8 The voltage regulator in a charging system of a vehicle ensures that

A An electrical connection is established through brushes riding on a slip ring.
B The alternator supplies a charge rate of between 13.5 and 14.5 volts to the battery.
C Has three sets of windings, attached to diodes.
D Supply voltage to the high tension leads of the ignition system.

1.1.9 The basic function of the vehicle suspension is to…

A Absorb vibration and impact forces from the road surface and provide a smooth ride.
B It maximises body dive when braking.
C Automatically straighten the vehicle after a turn
D Transfers the rotary motion of the drive shaft, through a 90 degree angle to power the wheels.

1.1.10 The component responsible for converting the rotational movement of the steering wheel to lateral movement of the wheels is the …

A Tie rod
B Steering box
C Steering rod
D Steering shaft (10 × 1) (10)

Copyright reserved

1.2 FIGURE 1 below, shows the wiring diagram of a starter motor. Identify and name the components ladled A to E in the answer book. (5)

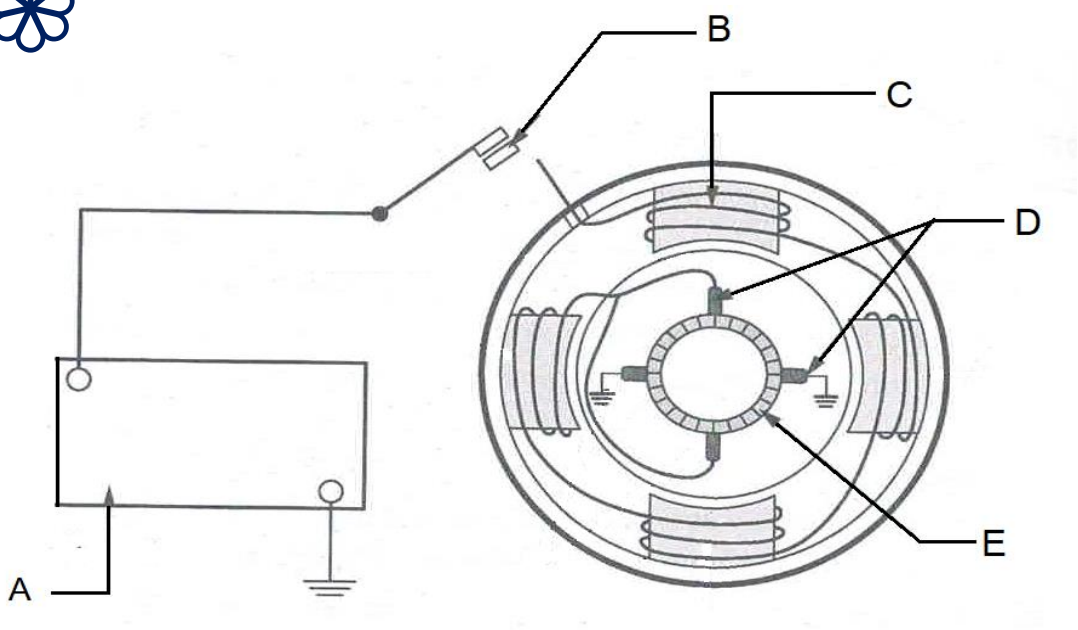

FIGURE 1

1.3 Indicate whether the following statements are 'True' or 'False'.

1.3.1 EBS brake systems works in conjunction with a yaw rate sensor.

1.3.2 The mechanical distributor has two ignition timing advance mechanisms.

1.3.3 A straight gauge can be used to measure camshaft deflection.

1.3.4 Too much clutch pedal free-play causes clutch drag.

1.3.5 Brushes conduct current to the stator windings on a starter motor.

(5 x 1) (5)

[20]

QUESTION 2

2.1 FIGURE 2, below shows the sketch of final drive and differential assembly. Identify and name the parts labelled (A-F) in the ANSWER BOOK. (6)

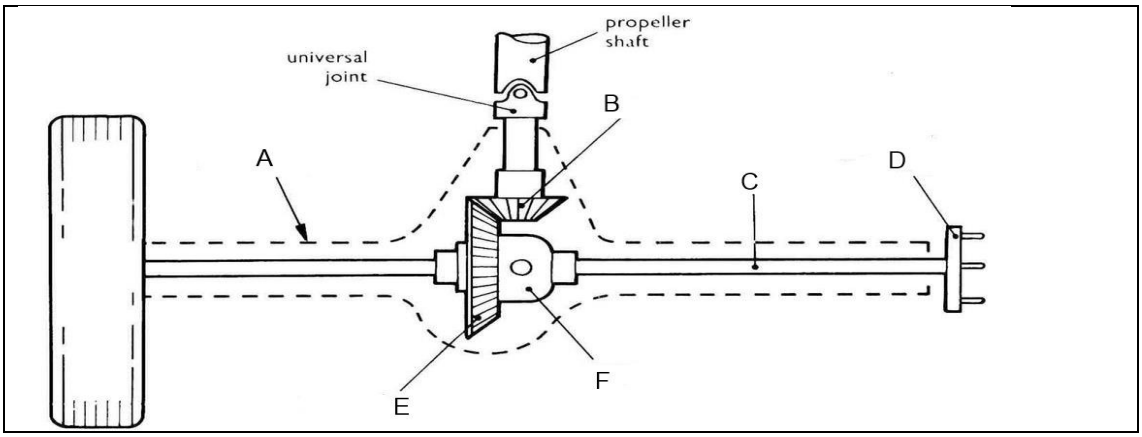

FIGURE 2

2.2 Describe the gear arrangement and components inside the component "F" in FIGURE 2 and what unit inside the final drive they are bolted to. (4)

2.3 Complete the following sentences by using the words in the list below. Write only the word next to the question number (1.3.1–1.3.5) in the ANSWER BOOK.

drum; wheel cylinders; fluid; footbrake; force

When the (2.3.1) …is depressed, the pedal acts on a piston within the master cylinder which pumps (2.3.2) … through the brake pipelines to the wheel cylinders. As fluid enters the (2.2.3) …, the pistons move outwards to bring the brake shoe linings into contact with the (2.3.4.) …. After all movement has been taken up, the force on the master cylinder piston pressurizes the fluid in the system and applies a (2.3.5.) …at each brake. (5)

2.4 Explain why brake fluid in hydraulic braking systems must be changed regularly. (2)

2.5 Name FOUR lighting systems found on most modern vehicles. (4)

[21]

QUESTION 3

3.1 With the aid of a neat sketch, illustrate clutch pedal free play. Label the diagram indicating the pedal height and the pedal free play. (4)

3.2 Write down the TWO main function of a clutch system. (2)

3.3 List One advantages of the following clutch release systems:

3.3.1 Cable system. (1)

3.3.2 Hydraulic system. (1)

3.4 Write down the THREE advantages of front-wheel drive vehicles over rear-wheel drive vehicles (3)

3.5 FIGURE 3 Shown below is an independent front suspension. Identify and name the components A-F in the ANSWER BOOK.

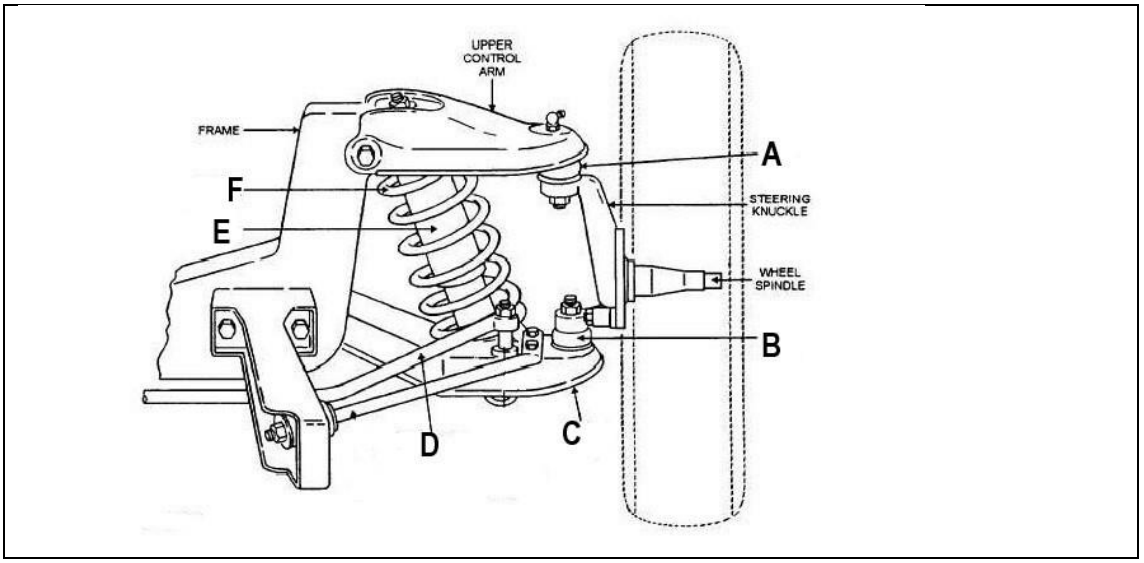

(6)

FIGURE 3

[17]

QUESTION 4

4.1 Fully explain the following wheel alignment terms:

4.1.1. Steering axis inclination (S.A.I) (2)

4.1.2. Included angle (2)

4.1.3. Toe out on turns (2)

4.2 Describe the term, understeer. (2)

4.3 Explain fully the operation of a synchroniser unit when selecting a gear. (5)

4.4 State TWO advantages of a six-speed transmission. (2)

4.5 4.5.1 When diagnosing faults in a 5-speed rear wheel drive gearbox, list TWO problems that will result in the 4th gear to be noisy. (2)

4.5.2. If a drive gear rotates at 20 revolutions per second and the driven gear that it is in meshed with, rotates at 10 revolutions per second. What will the gear ratio between the two gears be. (1)

4.6 Name TWO types of bearings used in gearboxes. (2)
[20]

QUESTION 5

5.1 Identify FOUR faults in a fuel system of a motor vehicle fitted with a carburettor that will result in heavy fuel consumption. (4)

5.2. Name TWO components that can be found on the air intake system of in an electronic fuel system and state one function of each component. (4)

5.3. Describe TWO advantages of a fuel injector when compared to a carburettor. (2)

5.4 FIGURE 4 below shows a conventional ignition coil. Identify and name the comments ladled (A – F) in the ANSWER BOOK. (6)

5.4

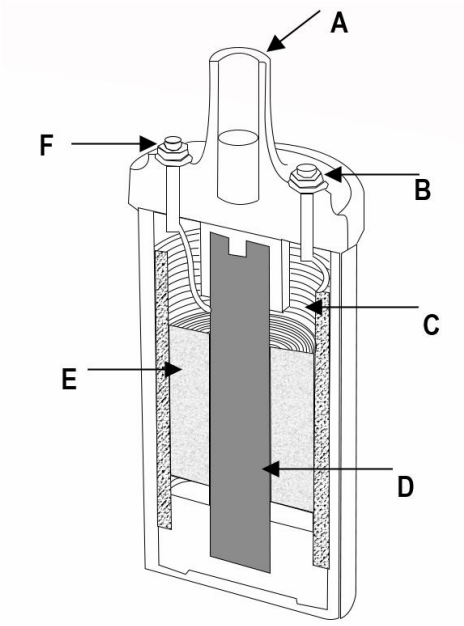

FIGURE 4

5.5. List TWO effects of the following conditions:

5.5.1 Ignition timing too far advanced. (2)

5.5.2 Ignition timing retarded or too slow. (2)

5.6 Explain the difference between sensors and actuators found on a distributor less ignition system. (2)
[22]

TOTAL MARKS: 100

Copyright reserved