higher education & training

Department:
Higher Education and Training
REPUBLIC OF SOUTH AFRICA

NATIONAL CERTIFICATE

MOTOR TRADE THEORY N2

(11040662)

1 December 2023 (X-paper)
09:00–12:00

This question paper consists of 9 pages.

215Q1G2301

Copyright reserved

DEPARTMENT OF HIGHER EDUCATION AND TRAINING
REPUBLIC OF SOUTH AFRICA

NATIONAL CERTIFICATE
MOTOR TRADE THEORY N2
TIME: 3 HOURS
MARKS: 100

INSTRUCTIONS AND INFORMATION

1. Answer all the questions.
2. Read all the questions carefully.
3. Number the answers according to the numbering system used in this question paper.
4. Use only blue or black ink.
5. Sketches must be large, neat and fully labelled.
6. Write neatly and legibly.

Copyright reserved

QUESTION 1

1.1 Various options are given as possible answers to the following questions. Choose the answer and write only the letter (A–D) next to the question number (1.1.1–1.1.10) in the ANSWER BOOK.

1.1.1 A six-speed transmission provides ……

A closer gear ratios.
B better fuel economy.
C higher top speeds.
D All of the above.

1.1.2 A hard brake pedal can be caused by……..

A low brake fluid level.
B too much brake pedal free-play.
C brake booster faulty.
D brake shoes worn.

1.1.3 The brake booster is operated using the following source …

A Exhaust pressure from the exhaust manifold
B Vacuum pressure from the intake manifold
C Hydraulic pump
D Electrical charging system

1.1.4 The effect of having too much camber is …

A uneven tyre wear.
B too much traction.
C hard steering.
D excessive steering pressure.

1.1.5 The included angle is the sum of …

A Caster and SAI.
B Camber and SAI.
C Caster and toe-in.
D Caster and camber.

1.1.6 The purpose of the caster angle is to …

A transfer the road conditions to the steering wheel.
B compensate for steering box wear.
C maintain directional control.
D prevent uneven tyre wear.

Copyright reserved

1.1.7 If a vehicle is idling and in neutral position, which of the following gears are rotating?

A The input gear and the cluster gear
B Only the input gear
C The cluster gear and the output gears
D The input gear, cluster gear and output gears

1.1.8 Which component directs fluid to the left or right on a power assisted steering rack system?

A Hydraulic pump
B Primary relief valve
C Discharge valve
D Rotary valve

1.1.9 The 'knock sensor' is fitted to the ……

A engine block.
B cylinder head.
C exhaust manifold.
D air intake system.

1.1.10 The main function of brake fluid is …

A cooling.
B power transmission.
C lubricating.
D sealing.

(10 × 1) (10)

1.2 Choose a description from COLUMN B that matches a word or term in COLUMN A. Write only the letter (A–L) next to the question number (1.2.1–1.2.10) in the ANSWER BOOK.

COLUMN A		COLUMN B	
1.2.1	Rack and pinion	A	clearance between the pushrod of the master cylinder or brake booster and brake pedal
1.2.2	Spiral gears		
1.2.3	Pitman arm	B	a component used to store electrical energy
1.2.4	Plastic gage	C	Is used to check oil clearance on main and big end journals.
1.2.5	Brake pedal free-play	D	wheel alignment angle to ensure that all the wheels follow their true course during cornering
1.2.6	Wheel alignment	E	a circular gear that engages with a linear gear
1.2.7	Vane type pumps	F	used for checking tooth contact pattern on final drives
1.2.8	Capacitor	G	used in cases where the direction of rotation needs to change
1.2.9	Ackerman angle	H	Commonly used with power steering systems.
1.2.10	Coil over spark plug	I	specifications for camber, caster, toe and ride height
		J	used in rear-wheel-drive vehicles only
		K	device used to increase voltage
		L	Connects to the steering box.

(10)
[20]

QUESTION 2

2.1 FIGURE 1 below shows the sketch of drive shaft as used on motor vehicles.

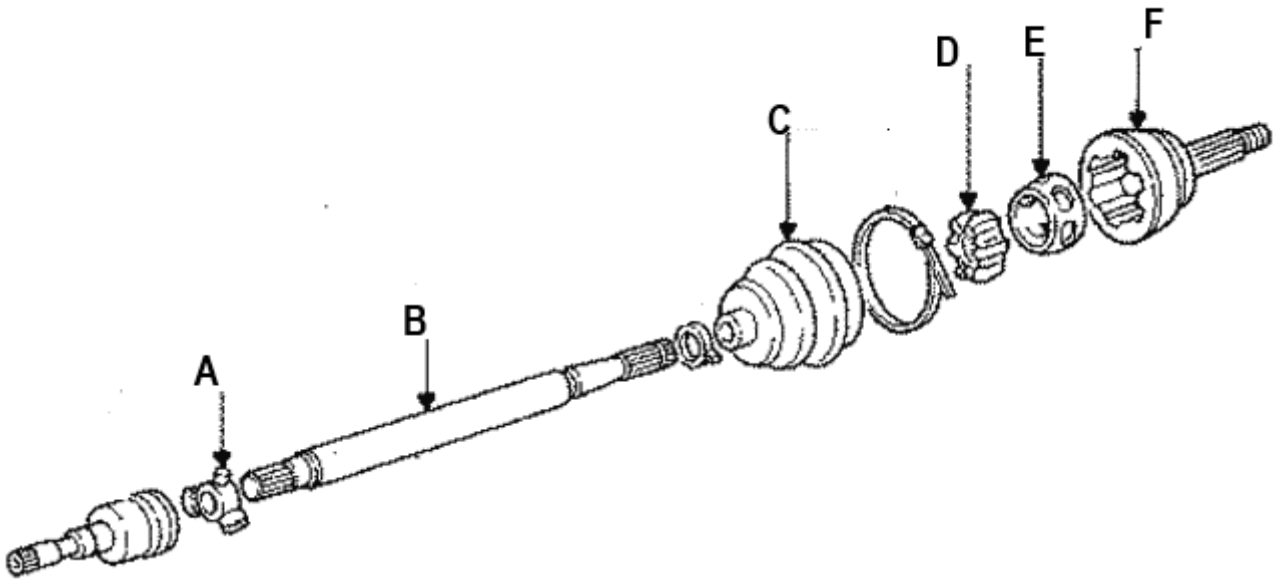

FIGURE 1

Name the parts labelled (A−F) in the ANSWER BOOK. (6)

2.2 Explain, in detail, what happens in a single plate clutch assembly when the clutch pedal is released. (5)

2.3 State TWO Functions of clutch free play. (2)

2.4 List THREE disadvantages of a clutch cable release mechanism. (3)

2.5 List TWO components found in an active suspension system. (2)

[18]

QUESTION 3

3.1 FIGURE 2 below shows a sketch of a synchromesh unit of a gearbox.

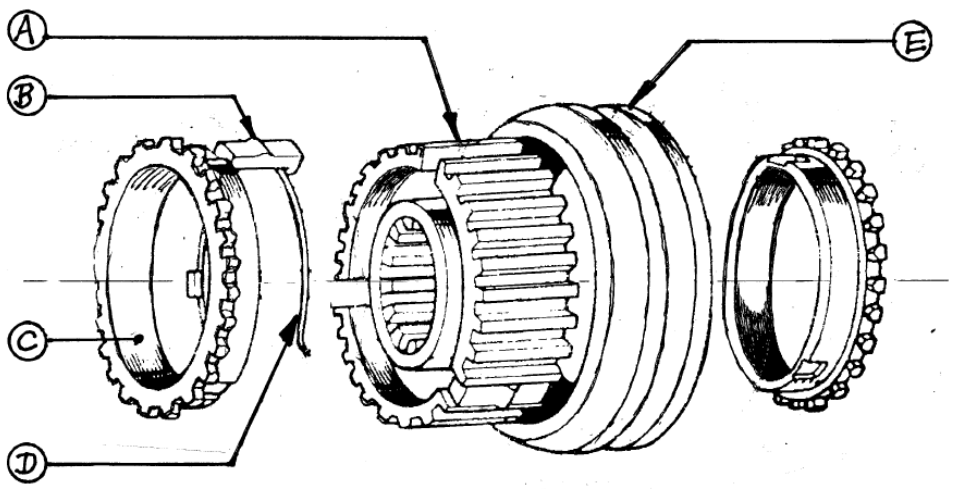

FIGURE 2

3.1.1 Name the parts labelled (A−E) in the ANSWER BOOK. (5)

3.1.2 Describe the function of component C. (2)

3.1.3 Name the part that moves component E. (1)

3.2 Describe the power flow when selecting 1st gear in a Rear Wheel Drive gearbox. (6)

3.3 Some vehicles are fitted with limited slip differentials:

3.3.1 Briefly describe its operation. (2)

3.3.2 List TWO disadvantages. (2)

3.3.3 Name FOUR consequences of incorrect pinion bearing preload adjustment. (4)

[22]

QUESTION 4

4.1 Explain what is meant by *ovality* of an engine cylinder and how it is measured. (4)

4.2 Describe THREE causes of low fuel pressure in a fuel injection system. (3)

4.3 Study FIGURE 4 below and label the components (A–F) in the ANSWER BOOK.

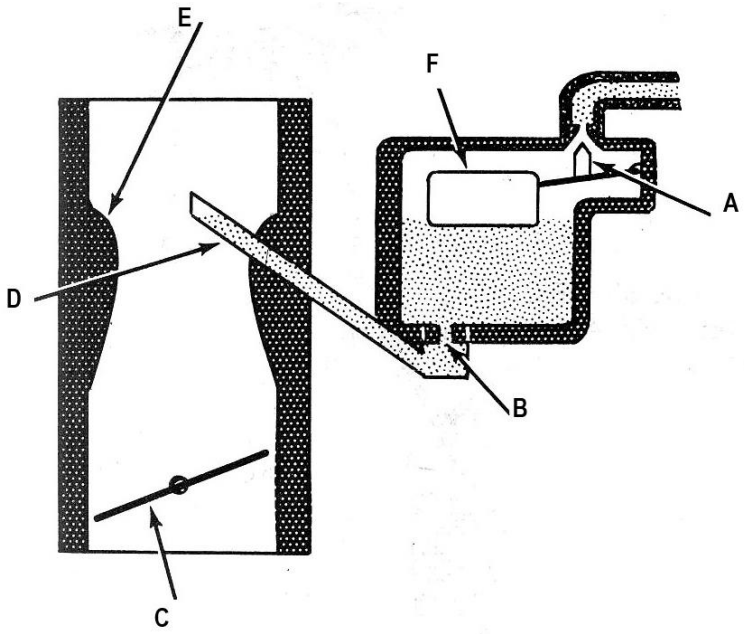

FIGURE 4 (6)

4.4 Complete the following sentences by using the words in the list below. Write only the word next to the question number (4.4.1–4.4.5) in the ANSWER BOOK.

condensor; LT circuit; battery; HT leads; ignition coil; battery; ignition switch

This system uses electrical energy produced by a (4.4.1 …) or alternator to supply the low-tension ignition current. The (4.4.2 ...) transforms the low voltage to that required to produce a high-voltage spark. The (4.4.3 …) connect the ignition coil to the distributor and to the spark plugs. The (4.4.4 …) is connected in the circuit across the contact points, (i.e. in parallel). It reduces arcing of the contact points and gives a rapid interruption of the (4.4.5 …). (5)

4.5 Describe TWO effects on engine performance, if ignition timing is advanced too much. (2)

4.6 Name TWO components responsible for ignition timing in the distributorless ignition system. (2)

[22]

Copyright reserved

QUESTION 5

5.1 FIGURE 3 below shows a sketch of a rear axle of a motor vehicle. Name the parts labelled (A−E) in the ANSWER BOOK.

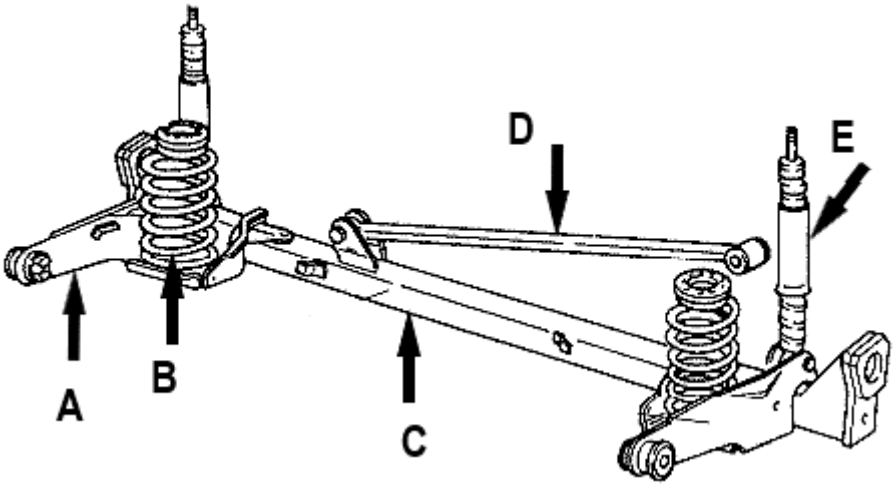

FIGURE 3 (5)

5.2 List TWO possible causes for each of the following brake system defects:

5.2.1 Brakes very soft

5.2.2 Brakes binding

5.2.3 No brakes

(3 × 2) (6)

5.3 Write down THREE adjustments that can be made to a vehicle's headlights. (3)

5.4 Explain, with reference to a vehicle air-conditioning system, ONE function of each of the following components:

5.4.1 Refrigerant

5.4.2 Compressor

5.4.3 Condenser

5.4.4 Evaporator

(4 × 1) (4)

[18]

TOTAL: 100

Copyright reserved