higher education & training

Department:
Higher Education and Training
REPUBLIC OF SOUTH AFRICA

NATIONAL CERTIFICATE

INDUSTRIAL ELECTRONICS N2

(8080602)

20 November 2023 (X-Paper)
09:00–12:00

Drawing instruments and nonprogrammable calculators may be used.

This question paper consists of 7 pages and 2 formula sheets.

001Q1E2320

Copyright reserved

DEPARTMENT OF HIGHER EDUCATION AND TRAINING
REPUBLIC OF SOUTH AFRICA

NATIONAL CERTIFICATE
INDUSTRIAL ELECTRONICS N2
TIME: 3 HOURS
MARKS: 100

INSTRUCTIONS AND INFORMATION

1. Answer all the questions.
2. Read all the questions carefully.
3. Number the answers according to the numbering system used in this question paper.
4. Use only a black or blue pen.
5. Drawings should be clear and neat and may be done in pencil.
6. Write neatly and legibly.

Copyright reserved

QUESTION 1

Various options are given as possible answers to the following questions. Choose the answer and write only the letter (A–D) next to the question number (1.1–1.10) in the ANSWER BOOK.

1.1 The number of times a cycle of alternating-current is repeated during one second is called the …….. of the current

A amplitude
B ammeter
C frequency
D flow

1.2 The emitter follower has ……. phase shift between input and output.

A 90°
B 0°
C 180°
D 270°

1.3 The voltage present across the two lines of a typical circuit in a house, periodically changes in … and constantly changes in magnitude.

A frequency
B polarity
C magnetic field
D period

1.4 An alternating voltage that has a peak-to-peak value of 360 V, would have an average value of …

A 127,26 V
B 156,77 V
C 114,66 V
D 284,06 V

1.5 When P-type and N-type material are joined by means of a special process, a phenomenon known as … takes place.

A resonance
B bonding
C oscillation
D diffusion

Copyright reserved

1.6 When a potential is applied to a circuit or apparatus, it is known as …

A a measuring instrument.
B biasing.
C doping.
D a short circuit.

1.7 A … is a device that converts one form of energy to another form of energy.

A transistor
B transmitter
C transducer
D transformer

1.8 A … is a temperature-sensitive transducer consisting of two conductors made of different metals and joined at both ends.

A bimetal strip
B thermistor
C potentiometer
D thermocouple

1.9 The basic construction of a photodiode is the same as the normal PN junction diode, except that a … is inserted in the casing to allow light to fall on it.

A light
B diode
C lamp
D window

1.10 A synchro system is formed when two synchro's are coupled together and connected to a/an …

A transmitter.
B AC source.
C amplifier.
D DC source.

(10 × 1) **[10]**

QUESTION 2

Refer to the circuit diagram below and answer the questions:

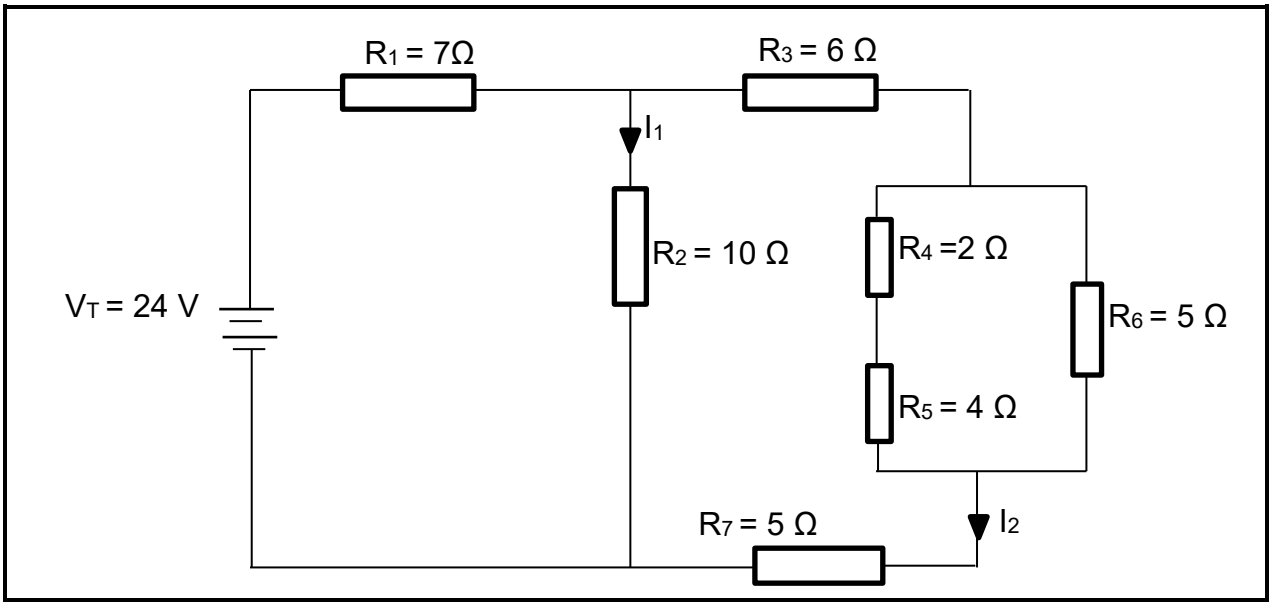

Calculate:

2.1 The total resistance in the circuit (R_T) (8)

2.2 The total current (2)

2.3 The voltage drop across R_2 (3)

2.4 Currents I_1 and I_2 (4)

2.5 The total power consumed by the circuit (3)

[20]

QUESTION 3

3.1 A coil with a resistance of 15 Ω and an inductance of 128 mH is connected in series with a 58 µF capacitor. The supply voltage is 100 V.

Determine the following:

3.1.1 The resonant frequency (2)

3.1.2 The inductive reactance (2)

3.1.3 The capacitive reactance (2)

3.1.4 The impedance (2)

Copyright reserved

3.1.5 The total current in the circuit (2)

3.1.6 The voltage across R, L and C (6)

3.1.7 The phase angle (2)

3.2 Draw the phasor diagram. (2)

[20]

QUESTION 4

4.1 Draw a neat, labelled circuit diagram of a full-wave rectifier by making use of a step-down transformer, four diodes, a filter circuit and a load resistor. Show the output wave without and with the filter circuit. (8)

4.2 Name TWO breakdown mechanisms that can occur if the reverse-bias voltage is greatly increased across a diode. (2)

4.3 Use the data given below to answer the questions:

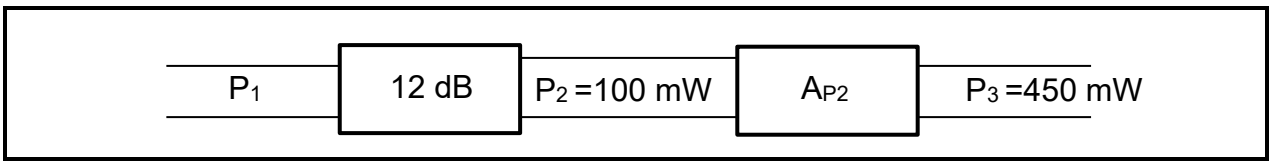

Calculate:

4.3.1 The value of P_1 (power in) (3)

4.3.2 The value of A_{P2} (power gain) (3)

4.3.3 The total gain in dB (2)

[18]

QUESTION 5

5.1 Draw a neat, labelled circuit symbol for each of the following transistors:

5.1.1 The PNP transistor

5.1.2 The NPN transistor

(2 × 2) (4)

5.2 Draw a neat, labelled circuit diagram of a NPN transistor amplifier in a common emitter configuration. (5)

5.3 Name FOUR applications of a light-dependent resistor (LDR). (4)

Copyright reserved

5.4 Draw a fully labelled diagram to show the construction of a light-dependent resistor (LDR). (5)

[18]

QUESTION 6

6.1 A moving-coil instrument has an internal resistance of 175 Ω and gives a full-scale deflection when 12,5 mA flows through it:
Calculate:

6.1.1 The value of the shunt resistor needed to convert the instrument to an ammeter that has a range of 0 A to 7 A. (3)

6.1.2 The value of the multiplier resistor needed to convert the instrument to a voltmeter with a range of 0 V to 45 V. (2)

6.2 Draw a fully labelled circuit diagram of a typical ohmmeter. (5)

6.3 State FOUR advantages of synchro systems. (4)

[14]

TOTAL: 100

Copyright reserved

INDUSTRIAL ELECTRONICS N2

FORMULA SHEET

Direct-current theory

$$V = I \cdot R \qquad P = V \cdot I \qquad P = \frac{V^2}{R}$$

$$P = I^2 \cdot R \qquad R_T = R_1 + R_2 \qquad \frac{1}{R_T} = \frac{1}{R_1} + \frac{1}{R_2} + \frac{1}{R_3}$$

$$R_T = \frac{R_1 \times R_2}{R_1 + R_2} \qquad I_1 = \frac{R_2}{R_1 + R_2} \times I_T$$

Alternating-current theory

$$t = \frac{1}{f} \qquad e = E_m Sin\theta \qquad e = E_m Sin\omega t$$

$$e = E_m Sin2\pi ft \qquad i = I_m Sin\theta \qquad i = I_m Sin\omega t$$

$$V_{rms} = 0{,}707 V_{max} \qquad I_{rms} = 0{,}707 I_{max} \qquad V_{ave} = 0{,}637 V_{max}$$

$$I_{ave} = 0{,}637 I_{max} \qquad Form\ factor = \frac{rms\ value}{average\ value}$$

$$Crest\ factor = \frac{maximum\ value}{rms\ value}$$

$$E_{ave} = \frac{e_1 + e_2 + e_3 + e_4 + e_5 + ...e_n}{n} \qquad I_{ave} = \frac{i_1 + i_2 + i_3 + i_4 + i_5 + ...i_n}{n} \qquad \omega = 2\pi f$$

$$E_{rms} = \sqrt{\frac{e_1^2 + e_2^2 + e_3^2 + e_4^2 + e_5^2 + ...e_n^2}{n}} \qquad I_{rms} = \sqrt{\frac{i_1^2 + i_2^2 + i_3^2 + i_4^2 + i_5^2 + ...i_n^2}{n}}$$

$$X_L = 2\pi fL \qquad X_C = \frac{1}{2\pi fC} \qquad V = I \cdot R$$

$$V_T = \sqrt{{V_R}^2 + {V_C}^2} \qquad V_T = \sqrt{{V_R}^2 + {V_L}^2} \qquad V_T = \sqrt{{V_R}^2 + (V_L \sim V_C)^2}$$

$$Z = \sqrt{R^2 + (X_L \sim X_C)^2} \qquad Z = \sqrt{R^2 + {X_L}^2} \qquad Z = \sqrt{R^2 + {X_C}^2}$$

$$I = \frac{V_T}{Z} \qquad I_R = \frac{V_T}{R} \qquad I_L = \frac{V_T}{X_L}$$

$$I_C = \frac{V_T}{X_C} \qquad I_T = \sqrt{{I_R}^2 + {I_X}^2} \qquad I_X = I_L \sim I_C$$

$$V_L = I \cdot X_L \qquad V_C = I \cdot X_C \qquad Z = \frac{V}{I_T}$$

$$\theta = \tan^{-1}\frac{I_X}{I_R} \qquad \theta = \cos^{-1}\frac{I_R}{I_T} \qquad \theta = \cos^{-1}\frac{R}{Z}$$

$$f_r = \frac{1}{2\pi\sqrt{LC}}$$

Copyright reserved

Measuring instruments

$$R_{SH} = \frac{I_M R_M}{I_{SH}} \qquad R_S = \frac{V}{I_M} - R_M$$

Transistors

$$I_E = I_C + I_B$$

Decibel ratios

$$N = 10 log \frac{P_{OUT}}{P_{IN}} \qquad N = 20 log \frac{I_{OUT}}{I_{IN}} + 10 log \frac{R_{OUT}}{R_{IN}} \qquad N = 20 log \frac{V_{OUT}}{V_{IN}} + 10 log \frac{R_{IN}}{R_{OUT}}$$

If $R_{IN} = R_{OUT}$:

$$N = 20 log \frac{V_{OUT}}{V_{IN}} \qquad N = 20 log \frac{I_{OUT}}{I_{IN}}$$

Resistance

$$R = \frac{\rho \ell}{A} \qquad A = \frac{\pi d}{4}$$

Copyright reserved