higher education & training

Department:
Higher Education and Training
REPUBLIC OF SOUTH AFRICA

NATIONAL CERTIFICATE

FITTING AND MACHINING THEORY N2

(11022032)

27 November 2023 (X-paper)
09:00–12:00

Drawing instruments and non-programmable calculators may be used.

This question paper consists of 9 pages and 1 formula sheet.

104Q1E2327

Copyright reserved

DEPARTMENT OF HIGHER EDUCATION AND TRAINING
REPUBLIC OF SOUTH AFRICA

NATIONAL CERTIFICATE
FITTING AND MACHINING THEORY N2
TIME: 3 HOURS
MARKS: 100

INSTRUCTIONS AND INFORMATION

1. Answer all the questions in SECTION A, except QUESTION 1 where you must answer either QUESTION 1.1 OR QUESTION 1.2.
2. Answer any TWO questions in SECTION B.
3. Read all the questions carefully.
4. Number the answers according to the numbering system used in this question paper.
5. Start each section on a new page.
6. Use only a black or blue pen.
7. Write neatly and legibly.
8. All calculations must be written to two decimal places.

Copyright reserved

SECTION A

QUESTION 1: OCCUPATIONAL SAFETY

NOTE: Answer ONLY QUESTION 1.1 **OR** QUESTION 1.2

1.1 State FIVE characteristics of effective machine guards. (5)

OR

1.2 State FIVE regulations associated with first aid certification for underground and surface mine workers, according to the Minerals Act No. 50 of 1991. (5)

[5]

QUESTION 2: COUPLINGS

2.1 Name THREE types of coupling misalignment. (3)

2.2 FIGURE 1 shows the diagram of a coupling.

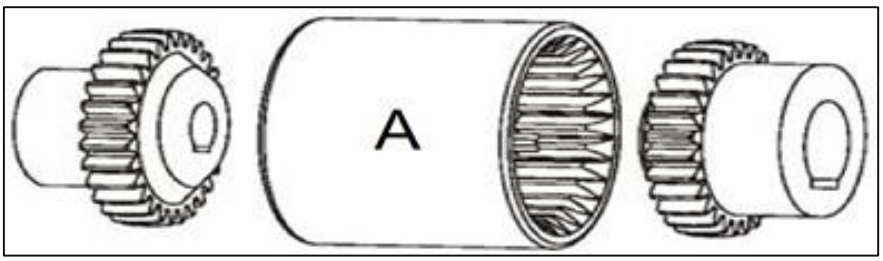

FIGURE 1

2.2.1 Name the coupling shown in FIGURE 1. (1)

2.2.2 Which group does this coupling belong to? (1)

2.2.3 Name the part labelled A. (1)

[6]

QUESTION 3: LIMITS AND FITS

3.1 Name three classes of fits. (3)

3.2 Explain the following terms relating to limits and fits

3.2.1 Hole basis system

3.2.2 Shaft basis system

3.2.3 Tolerance

3.2.4 Basic size

(4 × 1) (4)
[7]

QUESTION 4: BEARINGS

4.1 Name the THREE types of loads that bearings support. (3)

4.2 Name TWO reasons why plain bearings fail. (2)
[5]

QUESTION 5: LUBRICANTION AND VALVES

5.1 Lubricants are classified as solid, semi-solid and liquid types.

State the classification of the lubricant used in each of the following lubricators:

5.1.1 Splash feed lubricator

5.1.2 Stauffer grease cup lubricator

5.1.3 Oil gun

(3 × 1) (3)

5.2 Indicate whether the following statements are TRUE or FALSE by writing only 'True' or 'False' next to the question number (5.2.1–5,2,3) in the ANSWER BOOK.

5.2.1 A check valve prevents liquids from flowing backwards.

5.2.2 Pressure relief valves stay open all the time to allow fluid to return to the tank, thus preventing damage to the system.

5.2.3 A foot valve allows the flow of liquids in both directions.

(3 × 1) (3)
[6]

QUESTION 6: PACKING, STUFFING BOXES, JOINTS AND WATER PIPE SYSTEMS

6.1 Indicate whether the following statements are TRUE or FALSE by writing only 'True' or 'False' next to the question number (6.1.1–6.1.5) in the ANSWER BOOK.

6.1.1 The disadvantage of aluminium is that it rusts very easily.

6.1.2 A seal helps to maintain the pressure in a container

6.1.3 Teflon is the cheapest packing material available.

6.1.4 Graphite is a form of carbon and may be used as a seal material

6.1.5 The temperature conditions are important to consider when choosing the correct seal.

(5 × 1) (5)

6.2 Name FOUR methods of joining steel water pipes. (4)
[9]

QUESTION 7: PUMPS

7.1 State TWO functions of a pump. (2)

7.2 State the difference between *piston pumps* and *plunger pumps*. (2)

7.3 Explain the statement "A centrifugal pump is not a positive displacement pump". (2)
[6]

QUESTION 8: COMPRESSORS

FIGURE 2 shows a diagram of an air compressor. Name the parts indicated in the sketch by writing only the answer next to the letter (A–E) in the ANSWER BOOK.

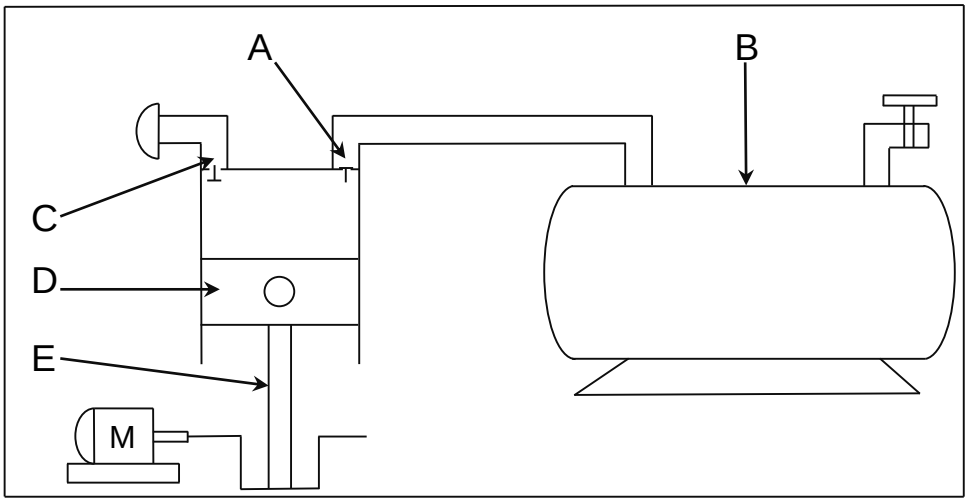

FIGURE 2 **[5]**

QUESTION 9: V-BELTS, CHAIN DRIVES, GEAR DRIVES AND REDUCTION GEARBOXES

9.1 State the causes of the following V-belt problems:

9.1.1 Small cracks

9.1.2 Swelling

9.1.3 Early failure

(3 × 1) (3)

9.2 Name the TWO gear profiles in relation to gear drives. (2)

9.3 Name FOUR types of chains used in the industry. (4)

9.4 State TWO purposes of reduction gearboxes. (2)

[11]

TOTAL SECTION A: 60

SECTION B

QUESTION 10: PNEUMATICS AND HYDRAULICS

10.1 Name the components associated with the ISO symbols shown in FIGURE 3 below. Write only the answer next to the letter (A–D) in the ANSWER BOOK. (4)

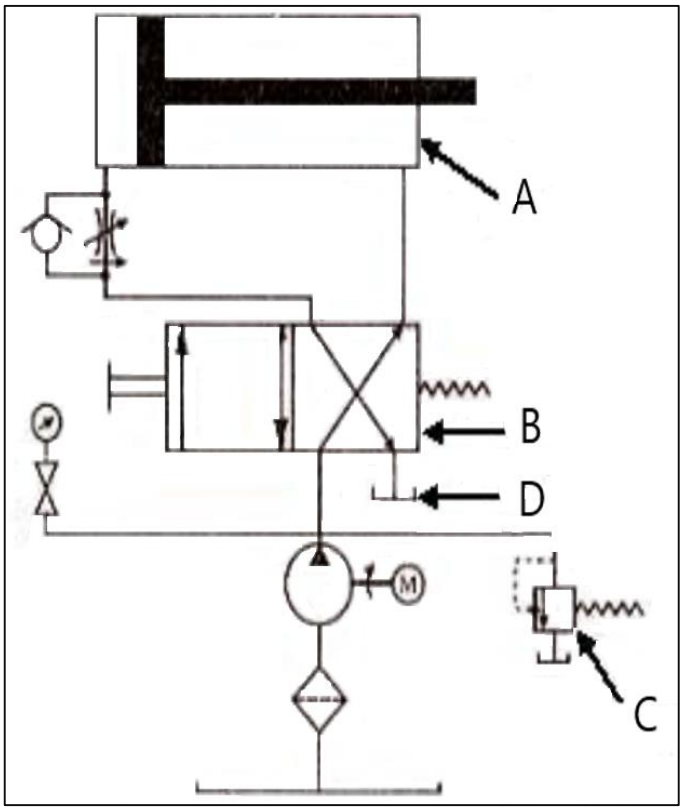

FIGURE 3

10.2 State FIVE main advantages of a pneumatic system (5)

10.3 State the function of each of the following hydraulic or pneumatic components:

10.3.1 Pressure relief valve

10.3.2 Reservoir

10.3.3 Hydraulic pump

10.3.4 Water trap

10.3.5 Compressor

(5 × 1) (5)

10.4 Name THREE types of valves you would find in a typical hydraulic system. (3)

10.5 State any THREE tasks that must be carried out during the daily maintenance on pneumatic systems. (3)

[20]

QUESTION 11: CENTRE LATHES

11.1 State the function of a lathe mandrel. (1)

11.2 State FOUR advantages of using mandrels on a lathe. (4)

11.3 One method used to set over the tailstock when taper turning on the centre lathe is the *graduated sleeve method.*

11.3.1 State TWO advantages of using this method.

11.3.2 State TWO disadvantages of using this method.

(2 × 2) (4)

11.4 Calculate the amount of tailstocl set-over required to machine the tapered shaft shown in FIGURE 4. (3)

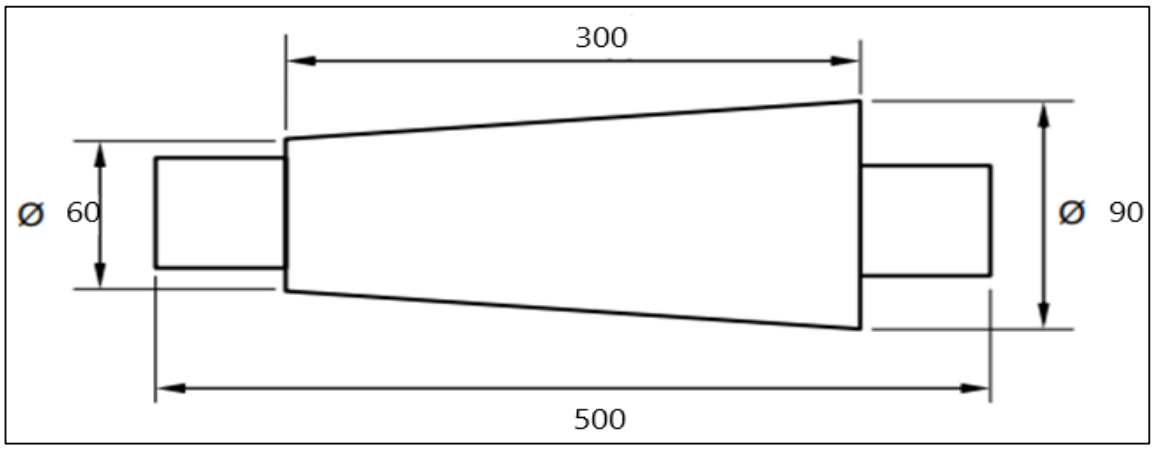

FIGURE 4

11.5 The cutting speed for a cast iron bar of 60 mm diameter is 20 m/min.
Calculate the rotational speed of the spindle in revolutions per minute. (3)

11.6 A two-start square thread of 14 mm pitch has to be machined on a round shaft with an outside diameter of 77 mm.

Calculate the helix angle (θ) of the thread: (5)
[20]

QUESTION 12: MILLING MACHINES AND SURFACES GRINDERS

12.1 State TWO functions of the dividing head (2)

12.2 Name the milling cutters shown in FIGURE 5 by writing only the answer next to the letter (A–C) in the ANSWER BOOK.

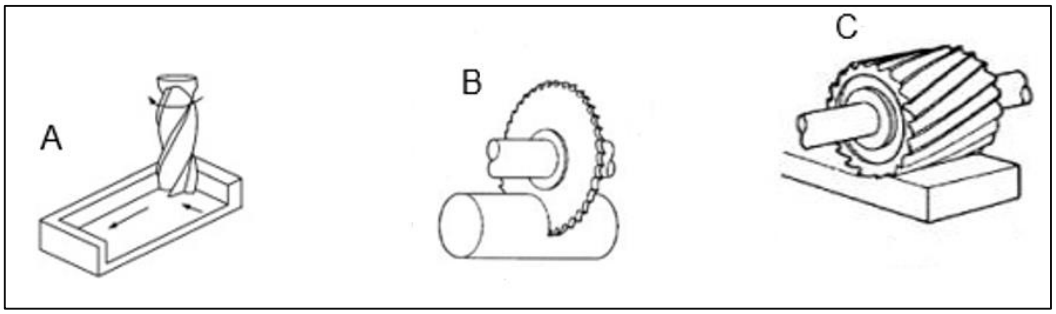

FIGURE 5 (3)

12.3 A milling machine has to mill 18 teeth on a gear blank. Calculate the required indexing using a Cincinnati dividing head.

THE CINCINNATI DIVIDING HEAD											
Side 1	24	25	28	30	34	37	38	39	41	42	43
Side 2	46	47	49	51	53	54	57	58	59	62	66

(5)

12.4 Calculate the feed in mm/min of an 85 mm diameter cutter with 15 teeth and a feed of 0.08 per tooth. The cutting speed of the material is 30 m/min. (5)

12.5 State the reason for surface grinding. (1)

12.6 State ONE difference between *off-hand grinding* and *precision grinding*. (2)

12.7 Name TWO types of grinding wheels (2)

[20]

TOTAL SECTION B: 40
GRAND TOTAL: 100

Copyright reserved

FORMULA SHEET

1. $f = ft \times T \times N$
2. $S = \frac{\pi DN}{60}$
3. $S = \pi DN$
4. $\frac{40}{N}$
5. $\frac{N}{9°}$
6. $\text{Setover} = \frac{D-d}{2} \times \frac{\text{length of workpiece}}{\text{length of taper}}$
7. $\text{Setover} = \frac{\text{length of workpiece}}{2} \times \text{Ratio}$
8. $\tan\frac{\theta}{2} = \frac{X}{L}$
9. $\text{Lead} = \text{number of starts} \times \text{pitch}$
10. $\text{Mean Diameter (Dm)} = \text{Outer diameter} - \frac{1}{2} \times \text{pitch}$
11. $\tan\theta = \frac{\text{Lead}}{\pi \times Dm}$
12. $\text{Leading angle} = 90° - (\text{helix angle} + \text{clearance angle})$
13. $\text{Following angle} = 90° + (\text{helix angle} - \text{clearance angle})$

Copyright reserved