higher education & training

Department:
Higher Education and Training
REPUBLIC OF SOUTH AFRICA

NATIONAL CERTIFICATE

FITTING AND MACHINING THEORY N2

(11022032)

21 November 2022 (X-paper)
09:00–12:00

This question paper consists of 9 pages and 1 formula sheet.

106Q1E2221

Copyright reserved

DEPARTMENT OF HIGHER EDUCATION AND TRAINING
REPUBLIC OF SOUTH AFRICA

NATIONAL CERTIFICATE
FITTING AND MACHINING THEORY N2
TIME: 3 HOURS
MARKS: 100

INSTRUCTIONS AND INFORMATION

1. Answer ALL questions in SECTION A.
2. Answer TWO question in SECTION B.
3. Read all the questions carefully.
4. Number the answers according to the numbering system used in this question paper.
5. Start each section on a new page.
6. Use only a black or a blue pen.
7. Write neatly and legibly.

Copyright reserved

SECTION A

ANSWER ALL QUESTIONS IN SECTION A

QUESTION 1: OCCUPATIONAL SAFETY

NOTE: Answer only QUESTION 1.1 **OR** QUESTION 1.2

1.1 Choose a term from COLUMN B that matches a description in COLUMN A. Write only the letter (A–F) next to the question number (1.1.1–1.1.5) in the ANSWER BOOK.

COLUMN A		COLUMN B	
1.1.1	Fixed in position and adjusted to within 3 mm of the surface of the grinding wheel	A	metal flange
1.1.2	Machine guard used for shafts, pulleys and gears	B	ventilated area
1.1.3	Outside diameter not less than one third of grinding wheel diameter	C	point-of-operation guard
1.1.4	Storage of compressed gas cylinders	D	work rest
1.1.5	Machine guard covering circular saw blades or punch press dies	E	transmission guard
		F	concrete store

(5 × 1) **[5]**

OR

1.2 Choose a term from COLUMN B that matches a description in COLUMN A. Write only the letter (A–F) next to the question number (1.2.1–1.2.5) in the ANSWER BOOK.

COLUMN A		COLUMN B	
1.2.1	Term used to describe a mine that contains flammable gases	A	first aid certificate
1.2.2	Person of authority who appoints drivers of self-propelled mobile machines	B	calcium carbide
1.2.3	Never to be stored or left in the underground workings of a mine	C	regional director
1.2.4	Must be renewed every 3 years	D	manager
1.2.5	Person of authority who consents to disturbing place of accident	E	boilers
		F	fiery

(5 × 1) **[5]**

Copyright reserved

QUESTION 2: COUPLINGS

2.1	What is the difference between a clutch and a coupling?	(2)
2.2	Name TWO types of rigid couplings.	(2)
2.3	Name TWO types of flexible couplings.	(2)

[6]

QUESTION 3: LIMITS AND FITS

Define the following terms relating to limits and fits:

3.1	Hole basis system	(2)
3.2	Shaft basis system	(2)
3.3	Basic size	(1)
3.4	Maximum limit of size	(1)
3.5	Tolerance	(1)

[7]

QUESTION 4: BEARINGS

4.1	Name TWO causes of bearing failure in anti-friction bearings.	(2)
4.2	Name THREE reasons for excessive vibration in anti-friction bearings.	(3)

[5]

QUESTION 5: LUBRICATION AND VALVES

5.1	State TWO functions of valves.	(2)
5.2	List FOUR factors that determine the selection of a lubricant.	(4)

[6]

QUESTION 6: PACKING, STUFFING BOXES AND JOINTS, AND WATER PIPE SYSTEMS

6.1	State THREE properties of white metal used for packings and seals.	(3)
6.2	Name THREE types of materials used to seal threaded pipes.	(3)

Copyright reserved

6.3 Name the THREE types of pipe fittings in FIGURE 1 below. Write only the answer next to the question number (6.3.1–6.3.3) in the ANSWER BOOK.

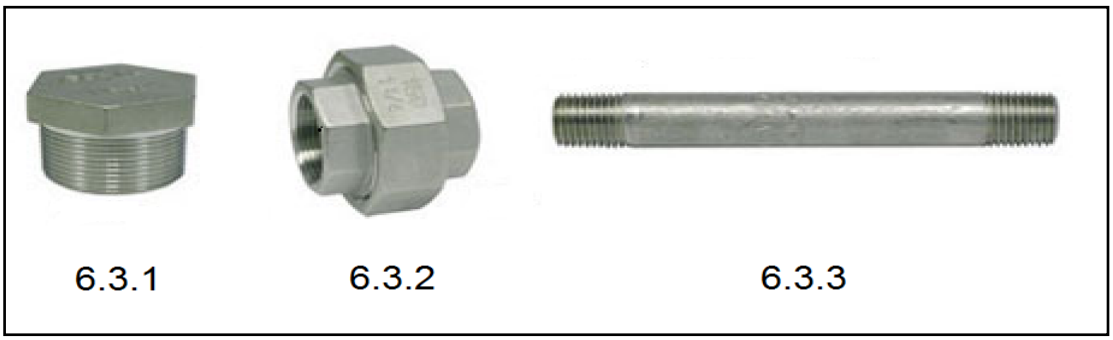

FIGURE 1

(3)
[9]

QUESTION 7: PUMPS

7.1 Name any TWO categories into which pumps are classified. (2)

7.2 FIGURE 2 below shows a sketch of a pump. Name the FOUR labelled parts of the pump by writing only the answer next to the question number (7.2.1–7.2.4.) in the ANSWER BOOK. (4)

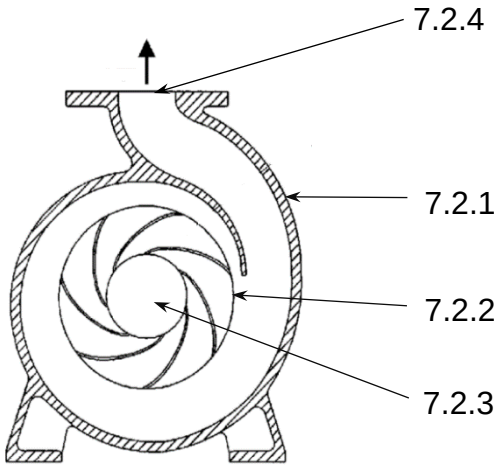

FIGURE 2

[6]

QUESTION 8: COMPRESSORS

Indicate whether the following statements are TRUE or FALSE by writing only 'True' or 'False' next to the question number (8.1–8.5) in the ANSWER BOOK.

8.1 Air filters are used to cool the air in the low pressure cylinder of a compressor.

8.2 A reservoir is used to store compressed air.

8.3 Pressure gauges are fitted to compressors to indicate the temperature of the air.

8.4 Compressors are classified into three groups, namely, rotary, reciprocating and centrifugal.

(4 × 1) **[4]**

QUESTION 9: V-BELT, GEAR DRIVES, CHAIN DRIVES, AND REDUCTION GEARBOXES

9.1 Name FIVE applications of gear drives in industry. (5)

9.2 State FOUR advantages of *V-belt drives* over *chain drives*. (4)

9.3 List THREE advantages of *chain drives* over *belt drives*. (3)

[12]

TOTAL SECTION A: 60

SECTION B

ANSWER ONLY TWO QUESTIONS IN SECTION B

QUESTION 10: HYDRAULICS AND PNEUMATICS

10.1 State the function of a pneumatic system. (1)

10.2 List the TWO most important factors in the functioning of a hydraulic system and state their SI units. (4)

10.3 Explain why it is necessary to depressurise a hydraulic system before working on it. (2)

10.4 Explain the functions of the following hydraulic components:

10.4.1 Piping

10.4.2 Pump

10.4.3 Actuator

Copyright reserved

10.4.4 Reservoir

(4 × 1) (4)

10.5 Make neat, freehand sketches of the ISO symbols representing the following hydraulic or pneumatic components:

10.5.1 Hydraulic pump

10.5.2 Reservoir

10.5.3 Compressor

10.5.4 Electric motor

10.5.5 Non-return valve

(5 x 1) (5)

10.6 FIGURE 3 below shows a circuit diagram of a pneumatic system.

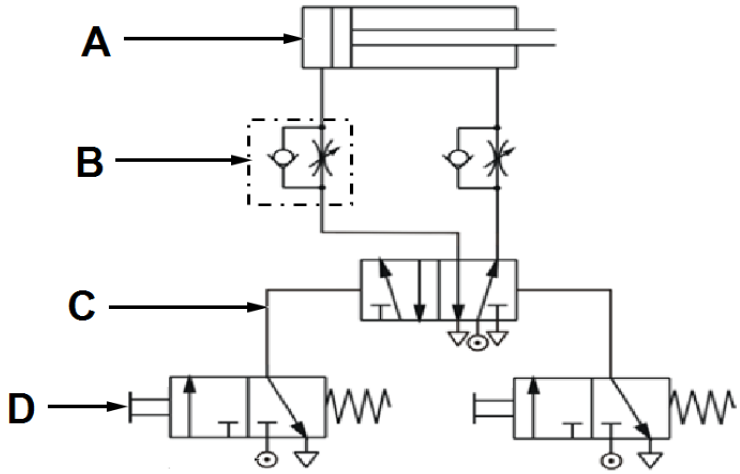

FIGURE 3

Label the components of the pneumatic system by writing only the answer next to the letter (A–D) in the ANSWER BOOK. (4 × 1) (4)

[20]

QUESTION 11: CENTRE LATHES

11.1 Name the TWO types of lathe steadies used on a centre lathe. (2)

11.2 FIGURE 3 below shows a tapered shaft which is to be turned to the dimensions provided.

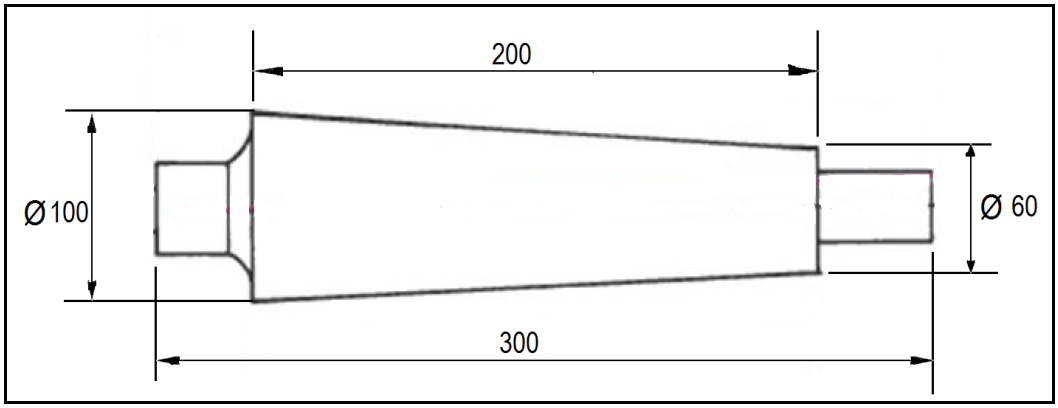

FIGURE 3

11.2.1 Calculate the amount of tailstock set-over. (3)

11.2.2 Calculate the included angle of the tapered portion. (4)

11.3 A lathe mandrel is a work-piece holding device. Name FOUR types of mandrels. (4)

11.4 A three-start square thread with a pitch of 8 mm and an outside diameter of 50 mm must be cut on a centre lathe.

Calculate the following:

11.4.1 The lead of the thread (2)

11.4.2 The mean diameter of the thread (2)

11.4.3 The helix angle of the thread (3)

[20]

Copyright reserved

QUESTION 12: MILLING MACHINES AND SURFACES GRINDERS

12.1 Name FOUR types of milling processes. (4)

12.2 Calculate the indexing required for an angular groove of 53° using a Cincinnati dividing head:

THE CINCINNATI DIVIDING HEAD											
Side 1	24	25	28	30	34	37	38	39	41	42	43
Side 2	46	47	49	51	53	54	57	58	59	62	66

(5)

12.3 List FIVE reasons for the use of small diameter cutters. (5)

12.4 State FOUR factors to be taken into account when selecting a grinding wheel for a specific material. (4)

12.5 Name the TWO types of work tables used on surface grinding machines. (2)

[20]

TOTAL SECTION B: 40
GRAND TOTAL: 100

Copyright reserved

FITTING AND MACHINING THEORY N2

FORMULA SHEET

1. $f = ft \times T \times N$

2. $S = \frac{\pi DN}{60}$

3. $S = \pi DN$

4. $\frac{40}{N}$

5. $\frac{N}{9°}$

6. $\text{Set-over} = \frac{D-d}{2} \times \frac{\text{length of workpiece}}{\text{length of taper}}$

7. $\tan \frac{\theta}{2} = \frac{X}{L}$

8. $\text{Leading angle} = 90° - (\text{helix angle} + \text{clearance angle})$

9. $\text{Following angle} = 90° + (\text{helix angle} - \text{clearance angle})$

10. $\text{Lead} = \text{number of starts} \times \text{pitch}$

Copyright reserved