higher education & training

Department:
Higher Education and Training
REPUBLIC OF SOUTH AFRICA

MARKING GUIDELINE

NATIONAL CERTIFICATE

ENGINEERING SCIENCE N2

18 November 2022

This marking guideline consists of 9 pages.

Copyright reserved

QUESTION 1: DYNAMICS

1.1 0,2 cm (1)

1.2 1.2.1 → 6 km east
← 8 km west (2)

Displacement = 8 km – 6 km = 2 km✓ west✓

1.2.2 $v = \frac{s}{t} = \frac{14}{(\frac{47}{60})}$ ✓ $= 17{,}872$ km/h✓ (2)

1.3 1.3.1 $V = u + at$
$= 10 + (0{,}5)(10)$ ✓
$= 15$ m/s✓ (2)

1.3.2

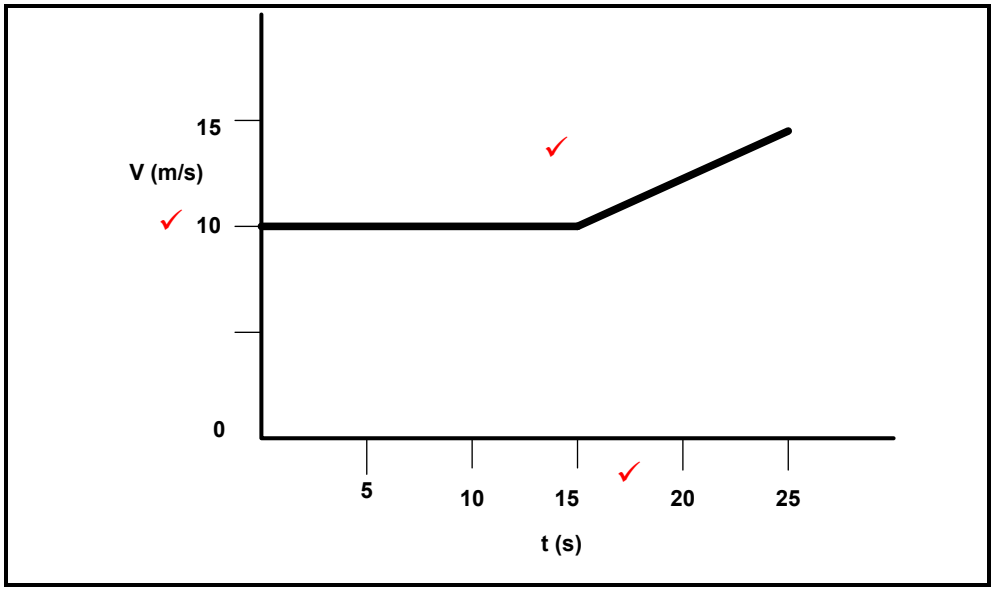

(3)

1.4 1.4.1 $S = lb + \frac{1}{2}bh$
$= (10 \times 25) + (\frac{1}{2} \times 10 \times 5)$ ✓
$= 250 + 25$ ✓
$= 275$ m✓ (3)

1.4.2 $V = \frac{s}{t} = \frac{275}{25}$ ✓ $= 11$ m/s✓ (2)

[15]

QUESTION 2: STATICS

2.1 A system of forces will be in equilibrium if the sum of the clockwise moments equals the sum of the anticlockwise moments✓ about the same turning point.✓ (2)

2.2 2.2.1 Take moments about B

∑CWM = ∑ACWM
$(A \times 9{,}5) = (168 \times 6) + (245 \times 11)$ ✓
$9{,}5A = 1008 + 2695$ ✓
$9.5A = 3703$
$A = 389{,}789$ N✓

Take moments about A

∑CWM = ∑ACWM
$(168 \times 3{,}5) + (200 \times 9{,}5) = (245 \times 1{,}5) + (B \times 9{,}5)$ ✓
$588 + 1900 = 367{,}5 + 9{,}5B$ ✓
$B = 223{,}211$ N ✓ (6)

2.2.2 $\sum\uparrow = \sum\downarrow$

$$223{,}211 + 389{,}789 = 245 + 168 + 200$$
$$613N = 613N \checkmark$$ (1)

2.3
- Tap wrench
- Wing nut
- Wheel spanner

(Any ONE) (1)

[10]

QUESTION 3: ENERGY AND MOMENTUM

3.1 Potential energy is the energy an object possesses due to its mass✓ and height.✓ (2)

3.2 3.2.1 m = 3 t = 3 000 kg V = 92 km/h = 25,556 m/s

$$E_k = \frac{1}{2}mv^2$$
$$= \frac{1}{2}(3000)(25{,}556)^2 \checkmark$$
= 979663,704 J OR 979 629,63 J OR $= 979{,}630$ kJ ✓ (2)

3.2.2 $P = mv$
$= 3000 \times 25{,}556$
= 76 668 kg.m/s✓ OR 76666,667 kg.m/s (1)

3.3 $Ep = mgh$

$h = \frac{E_P}{mg}$

$= \frac{10000}{25 \times 9,8}$ ✓

$= 40,816$ m✓ (2)

[7]

QUESTION 4: WORK, POWER AND EFFICIENCY

4.1 A joule is the work done when a force of 1 N is applied over 1 m distance in the direction of a force. ✓ (1)

4.2 4.2.1

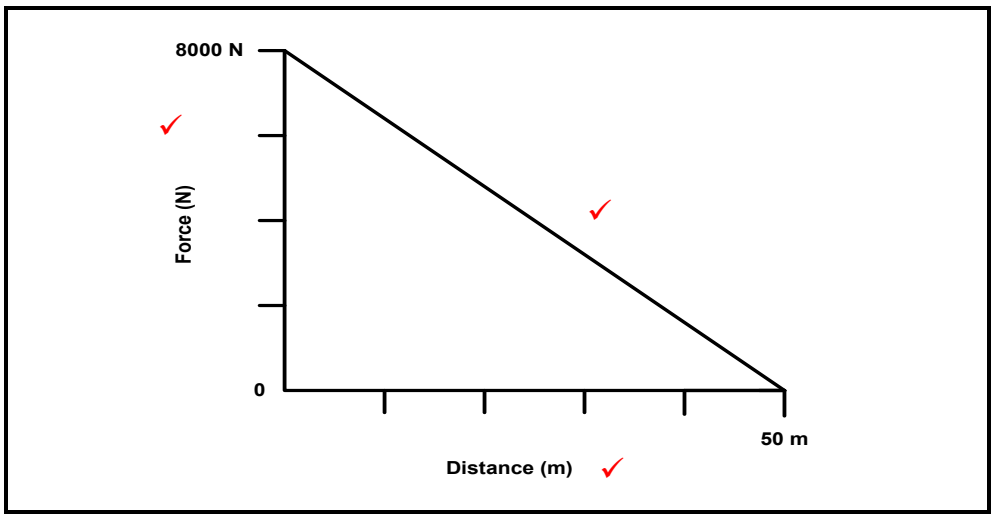

(2)

4.2.2 $W = \frac{1}{2}bh$

$= \frac{1}{2} \times 50 \times 8000$ ✓

= 200 000 J✓ (2)

4.2.3 $P = \frac{W}{t}$ $= \frac{200000}{120}$ ✓ $= 1666,667$ W✓ (2)

4.3 $T = F \times r$

$r = \frac{10,5}{130}$ ✓

$r = 0,081$ m✓

$D = 0,081 \times 2$

$= 0,162$ m✓ OR 161,538m (3)

[10]

QUESTION 5: MECHANICAL DRIVES AND LIFTING MACHINES

5.1
- Need lubrication
- Noisy
- Short distance between shafts
- Not flexible
- Expensive (2)

5.2
- Idler gear
- Intermediate gear (Any ONE) (1)

5.3 $N_A T_A = N_B T_B$ OR $N_a \times T_a = N_c \times T_c$✓

$10 \times 70 = N_B \times 130$ $N_c = \frac{10 \times 70}{65}$✓ $= 10{,}769 rev/s$✓

$N_B = 5{,}385$ rev/s✓

$N_B T_B = N_C T_C$

$130 \times 5{,}385 = N_C \times 65$ ✓

$N_C = 10{,}769$ rev/s✓ (3)

5.4 5.4.1 $V = \pi dn$

$= \pi(0{,}13)\left(\frac{625}{60}\right)$ ✓✓

$= 4{,}254$ m/s✓ (3)

5.4.2 $D = \frac{V}{\pi n}$

$= \frac{4{,}254}{\pi \times 15}$ ✓

$= 0{,}090$ m✓ $= 90$ mm OR 90,273mm (2)

5.4.3 $\frac{T_1}{T_2} = 1{,}5$

$T_2 = \frac{2300}{1{,}5} = 1533{,}333$ N

$P = (T_1 - T_2)V$

$= (2300 - 1533{,}333) \times 4{,}254$ ✓

$= 766{,}667 \times 4{,}254$ ✓

$= 3261{,}401$ W✓ (3)

5.5

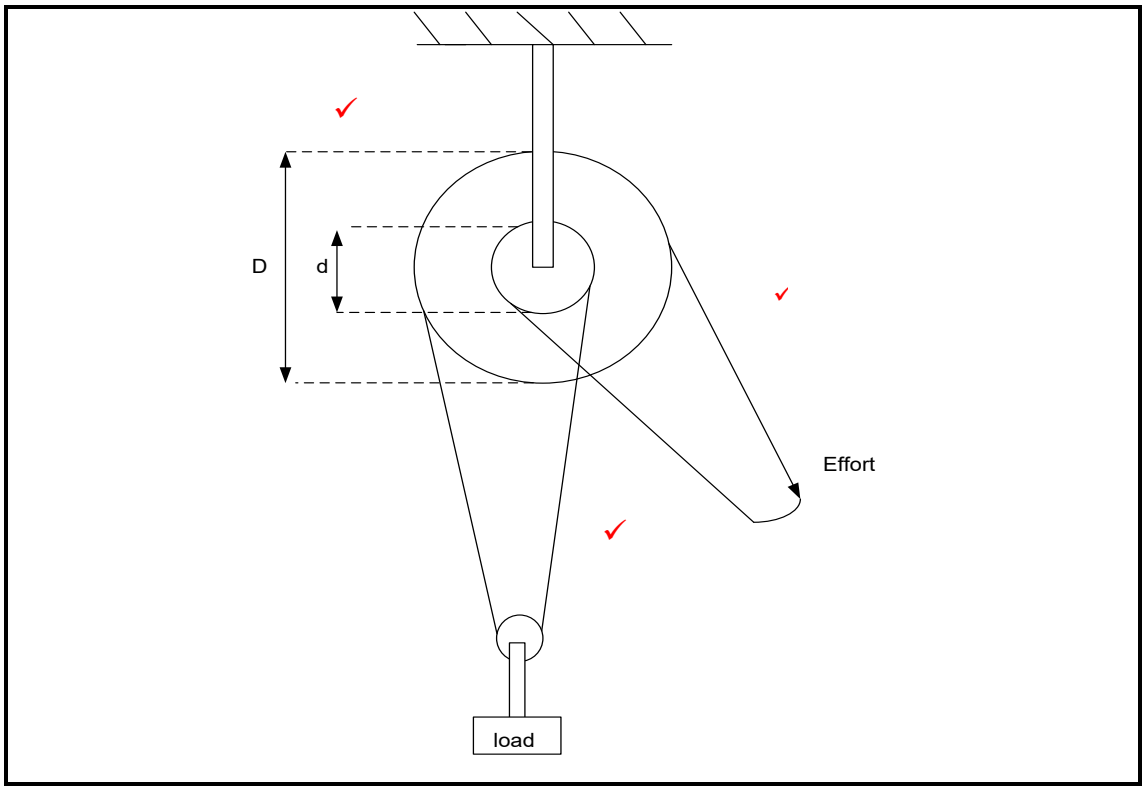

(3)
[17]

QUESTION 6: FRICTION

6.1
- Friction can bring linear and rotational movement to a standstill.
- Friction is used to drive devices, components and machines.
- Friction is used to clamp a workpiece. (Any ONE) (1)

6.2

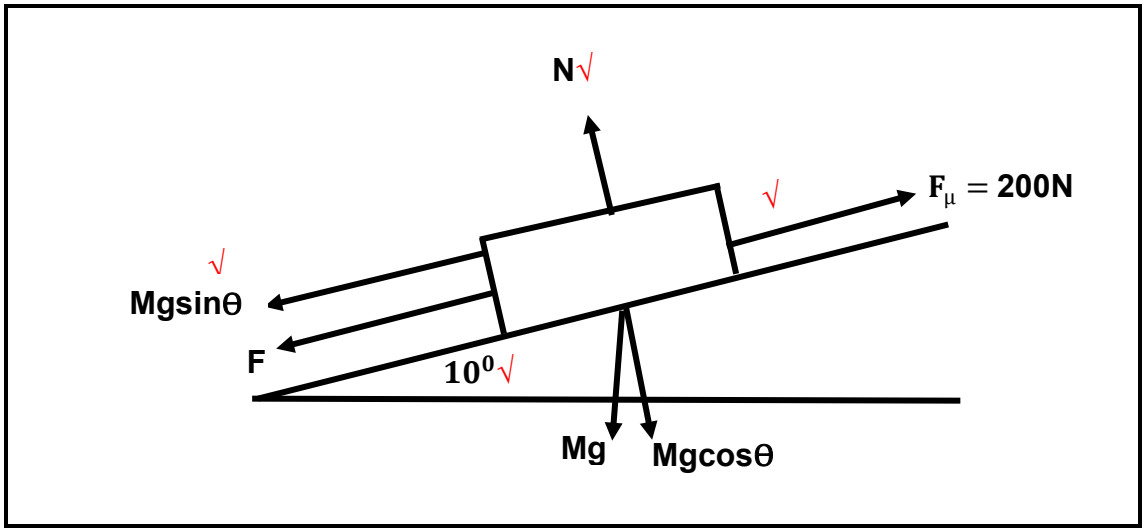

(½ mark for correct diagram)
(½ mark for perpendicular forces)
(½ mark for downward forces)
(½ mark for opposing force) (2)

6.3 6.3.1 $\mu = \frac{F_\mu}{W}$ (2)

$= \frac{200}{70 \times 9{,}8\ cos\ 10^0}$✓

$= 0{,}296$✓

6.3.2 $F_S = w \sin\theta$ (2)

$= 686\ sin\ 1\ 0^0$✓

$= 119{,}123$N✓

6.3.3 $F_d = F_\mu - w \sin\theta$ (2)

$= 200 - 119{,}123$✓

$= 80{,}877$N✓

[9]

QUESTION 7: HEAT

7.1 Heat capacity of a substance is the quantity of heat required to raise the temperature of a substance by 1 kelvin or 1 ^{0}C. (1)

7.2
- Solid fuels – wood, coal, etc.
- Liquid fuels – petrol, paraffin, etc.
- Gas fuels – methane, butane, etc. (3)

7.3
- Mass
- Specific heat capacity
- Change in temperature (3)

7.4 $m = \frac{Q}{c\Delta t}$

$= \frac{\div 93730}{4187 \times (-10-15)}$✓ **NB:** Heat rejected is negative

$= 0{,}895$ kg✓

(2)

7.5 $\Delta L = L_O \alpha \Delta t$

$= 2{,}3 \times 0{,}000017 \times (33-12)$

$= 8{,}211 \times 10^{-4}$ m✓

$L_f = \Delta L + L_O$

$= 8{,}211 \times 10^{-4} + 2{,}3$

$= 2{,}3008$ m✓

(2)

[11]

QUESTION 8: PARTICLE STRUCTURE OF MATTER

8.1 An ion is an atom that gained or lost an electron. (1)

8.2
- Protons – positive
- Neutrons – neutral
- Electrons – negative (3)

8.3 There are no charged ions in pure water to conduct electricity, therefore pure water is a good insulator. (2)

8.4
- Electroplating
- Refining of materials
- Preparation of chemicals
- Corrosion
- To extract materials from ore (Any 2 × 1) (2)

[8]

QUESTION 9 : ELECTRICITY

9.1
- Fixed resistors
- Adjustable resistors (2)

9.2 The current flowing in a circuit is directly proportional to the voltage✓ and inversely proportional to the resistance.✓ (2)

9.3
$$\frac{1}{R_p} = \frac{1}{R_1} + \frac{1}{R_2}$$
$$\frac{1}{R_1} = \frac{1}{2} - \frac{1}{3} \checkmark$$
$$\frac{1}{R_1} = \frac{1}{6} \checkmark$$
$$R_1 = 6\,\Omega \checkmark$$
(3)

9.4
$$R = \frac{\rho l}{A} \qquad A = \frac{\pi d^2}{4} = \frac{\pi \times (1{,}3 \times 10^{-3})^2}{4} = 1{,}327 \times 10^{-6}\ \text{m}^2 \checkmark$$
$$l = \frac{3 \times 1.327 \times 10^{-6}}{0{,}000000018} \checkmark$$
$$= 221{,}167\ \text{m} \checkmark$$
(3)

9.5

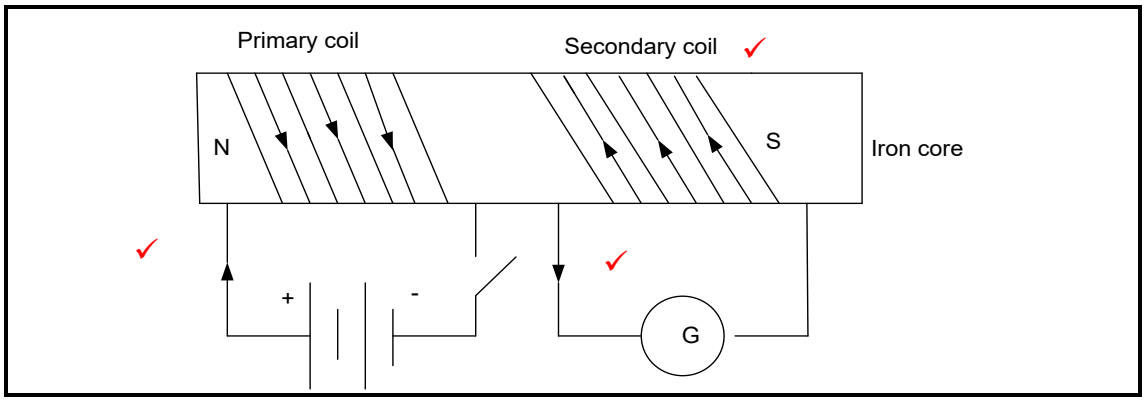

(3)
[13]

TOTAL: 100

Copyright reserved