higher education & training

Department:
Higher Education and Training
REPUBLIC OF SOUTH AFRICA

NATIONAL CERTIFICATE

ENGINEERING DRAWING N2

(8090272)

29 November 2022 (X-paper)
09:00–13:00

REQUIREMENTS: One A2 drawing sheet (BOE 8/20)

Drawing instruments may be used.

This question paper consists of 12 pages and an answer sheet of 2 pages.

284Q1E2229

Copyright reserved

DEPARTMENT OF HIGHER EDUCATION AND TRAINING
REPUBLIC OF SOUTH AFRICA

NATIONAL CERTIFICATE
ENGINEERING DRAWING N2
TIME: 4 HOURS
MARKS: 100

INSTRUCTIONS AND INFORMATION

1. Answer all the questions.
2. Read all the questions carefully.
3. Number the answers according to the numbering system used in this question paper.
4. Use both sides of the drawing sheet.
5. Draw a border of 15 mm on both sides of the drawing sheet.
6. All drawings should be done neatly using own drawing instruments, unless indicated differently.
7. Only the candidate information must be done in ink on the drawing sheet. All other drawing work must be done in pencil.
8. All drawings must conform to the latest SANS 10111 Code of Practice.
9. Unspecified radii must be R3.
10. A balanced layout is very important, and candidates will be penalised for poor planning.
11. Write neatly and legibly.

Copyright reserved

QUESTION 1: FUNDAMENTALS OF ENGINEERING DRAWING, FASTENING DEVICES, WELDING SYMBOLS AND MACHINING SYMBOLS

NOTE: Answer this question on the ANSWER SHEETS (attached). Enter your EXAMINATION NUMBER on the ANSWER SHEETS and submit it with the DRAWING SHEET.

1.1 What is the function of the following computer hardware:

1.1.1 Central Processing Unit (CPU)

1.1.2 CD ROM

1.1.3 Keyboard

1.1.4 Plotter

(4 × 1) (4)

1.2 Draw a neat freehand drawing, in proportion, of an M10 cheese-head machine screw with a shank length of 55 mm. (3)

1.3 FIGURE 1 on the ANSWER SHEET (attached) shows a T-joint to be welded. On the ANSWER SHEET, insert a welding symbol on Figure A indicating a fillet weld, all around, on-site. (3)

1.4 Draw a neat surface machine symbol with the following parameters:

- A roughness value of 0,25 micrometres.
- Machined by using a milling machine, perpendicular to the edge. (4)

[14]

QUESTION 2: SCREW THREADS

FIGURE 2 below shows a front view of a machine bolt.

Redraw the machine bolt to scale 1:1.

Provide part A with a single-start, external, right-hand V-screw thread with a pitch of 8 mm. **[10]**

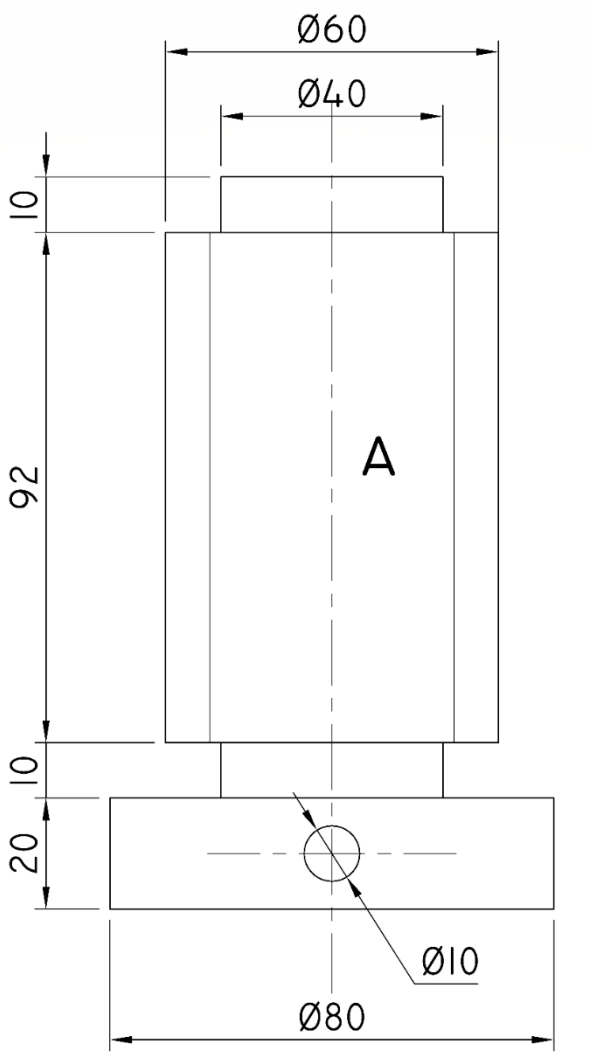

FIGURE 2

QUESTION 3: FIRST-ANGLE ORTHOGRAPHIC PROJECTION

FIGURE 3 (following page) shows a half-sectional front view and an outside left view of an anti-vibration mounting in first-angle orthographic projection.

A pivot arm, with bushes on either side, is held to a base by an M20 hexagonal bolt. The bolt is secured with a hexagonal nut and washer that have been omitted on this view.

3.1 Draw, to scale 1:1, the following views in first-angle orthographic projection:

3.1.1 A full-sectional front view on cutting plane X-X adding the nut and washer in their correct working position. (8)

3.1.2 An outside left view showing the nut and washer in position. No hidden detail is required. (5)

3.2 Insert the following title and scale centrally beneath the layout:

ANTI-VIBRATION MOUNTING
SCALE 1:1 (2)

Line work, accuracy, layout and neatness. (5)

[20]

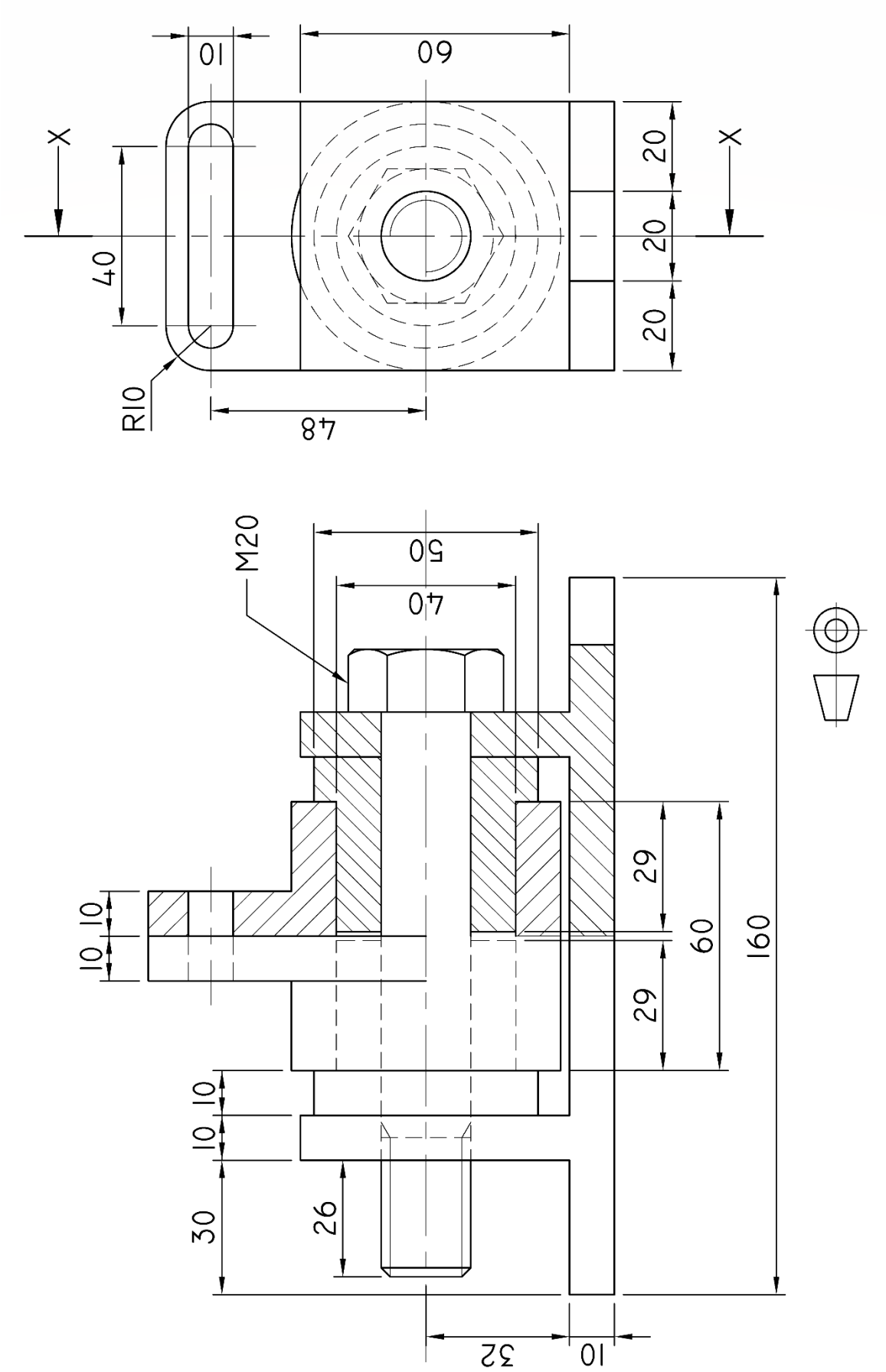

FIGURE 3

Copyright reserved

QUESTION 4: ISOMETRIC DRAWING

FIGURE 4 (following page) shows two views of a machined component drawn in first-angle orthographic projection.

Do not draw the given views of the component but draw an isometric view of the component to scale 1:1. Point G must be the lowest point.

Draw an auxiliary view to determine the angle of the non-isometric lines.

No hidden detail is required. **[15]**

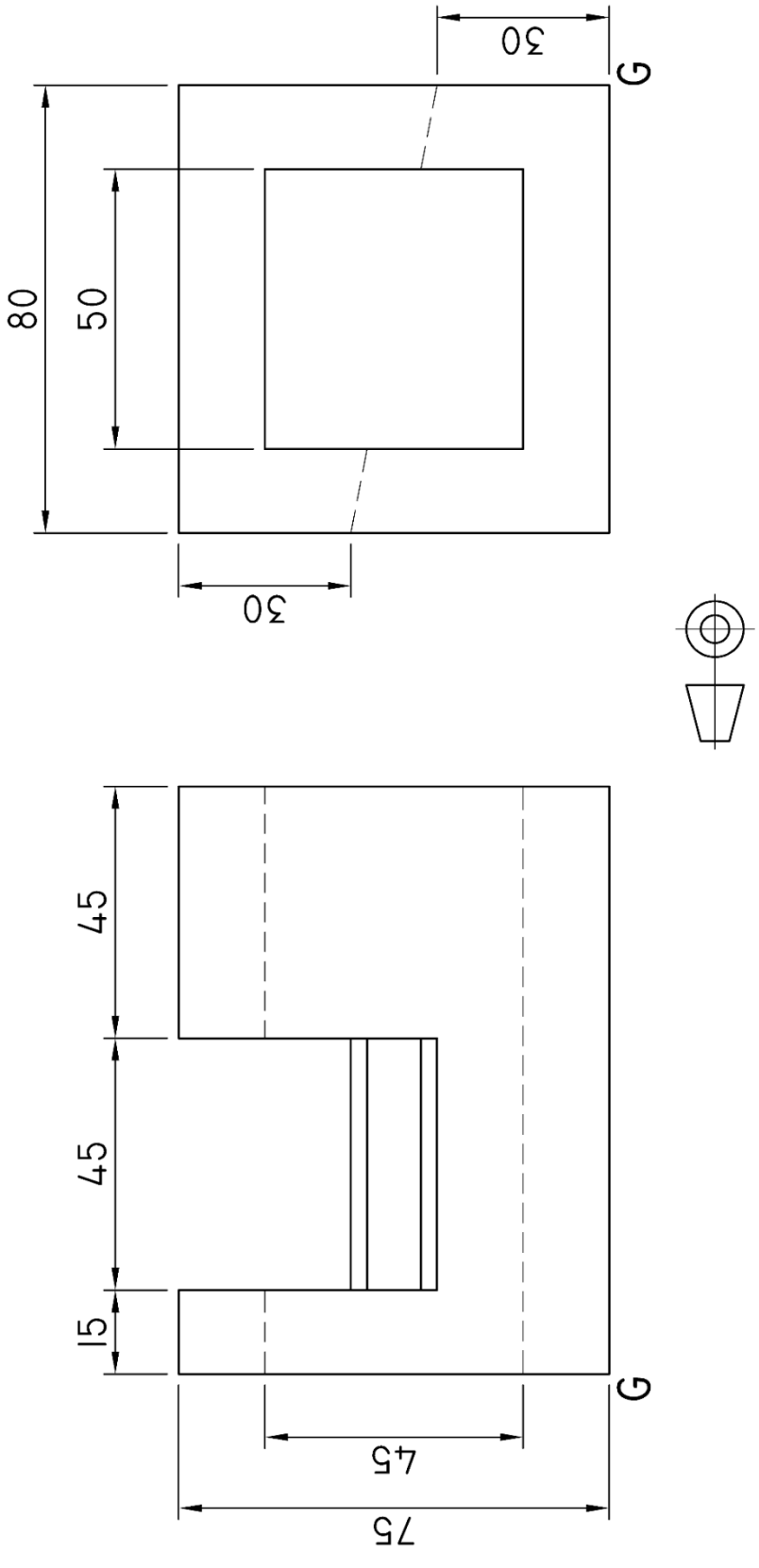

FIGURE 4

Copyright reserved

QUESTION 5: INTERPENETRATION

FIGURE 5 (following page) shows two views of a hexagon pipe penetrated by a square pipe without the interpenetration lines in third-angle orthographic projection.

5.1	Redraw the two views in third-angle orthographic projection to scale 1:1.	(3)
5.2	Show all the construction lines needed to project the curve of interpenetration.	(3)
5.3	Draw the interpenetration curve on the front view.	(4)
	Linework, accuracy, layout and neatness.	(5)
		[15]

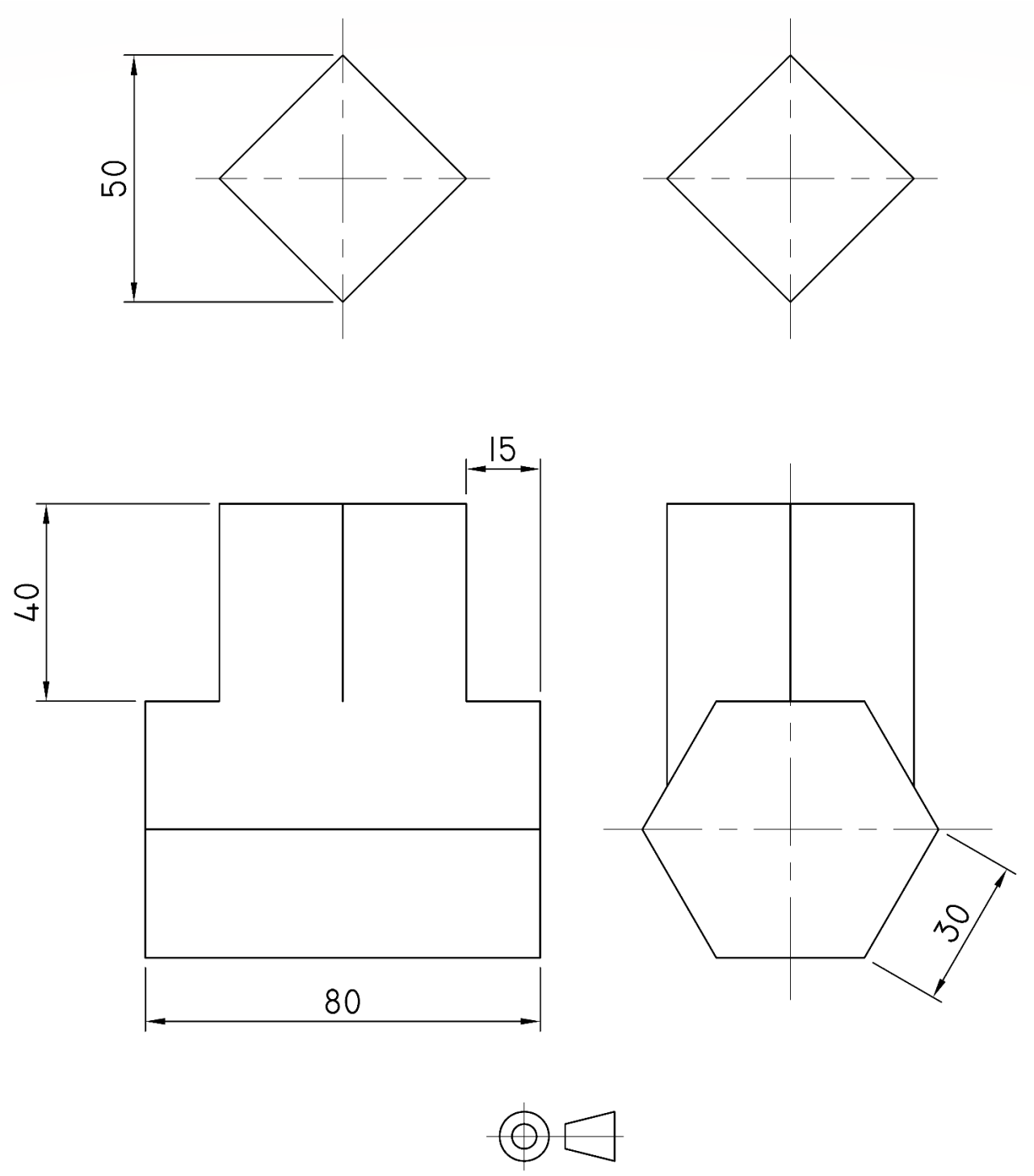

FIGURE 5

Copyright reserved

QUESTION 6: THIRD-ANGLE ORTHOGRAPHIC PROJECTION

FIGURE 6 on the following page shows two views of a clamp link.

Draw to scale 1:1 and in third-angle orthographic projection, the following views of the clamp link.

6.1	An outside front view with hidden detail is shown.	(6)
6.2	A full-sectional right view on cutting plane B-B.	(4)
6.3	A full-sectional top view on cutting plane A-A.	(5)
6.4	Add any six dimensions.	(3)
6.5	Insert the third-angle orthographic projection symbol centrally beneath the layout.	(1)
	Layout, neatness, linework and accuracy.	(7)
		[26]

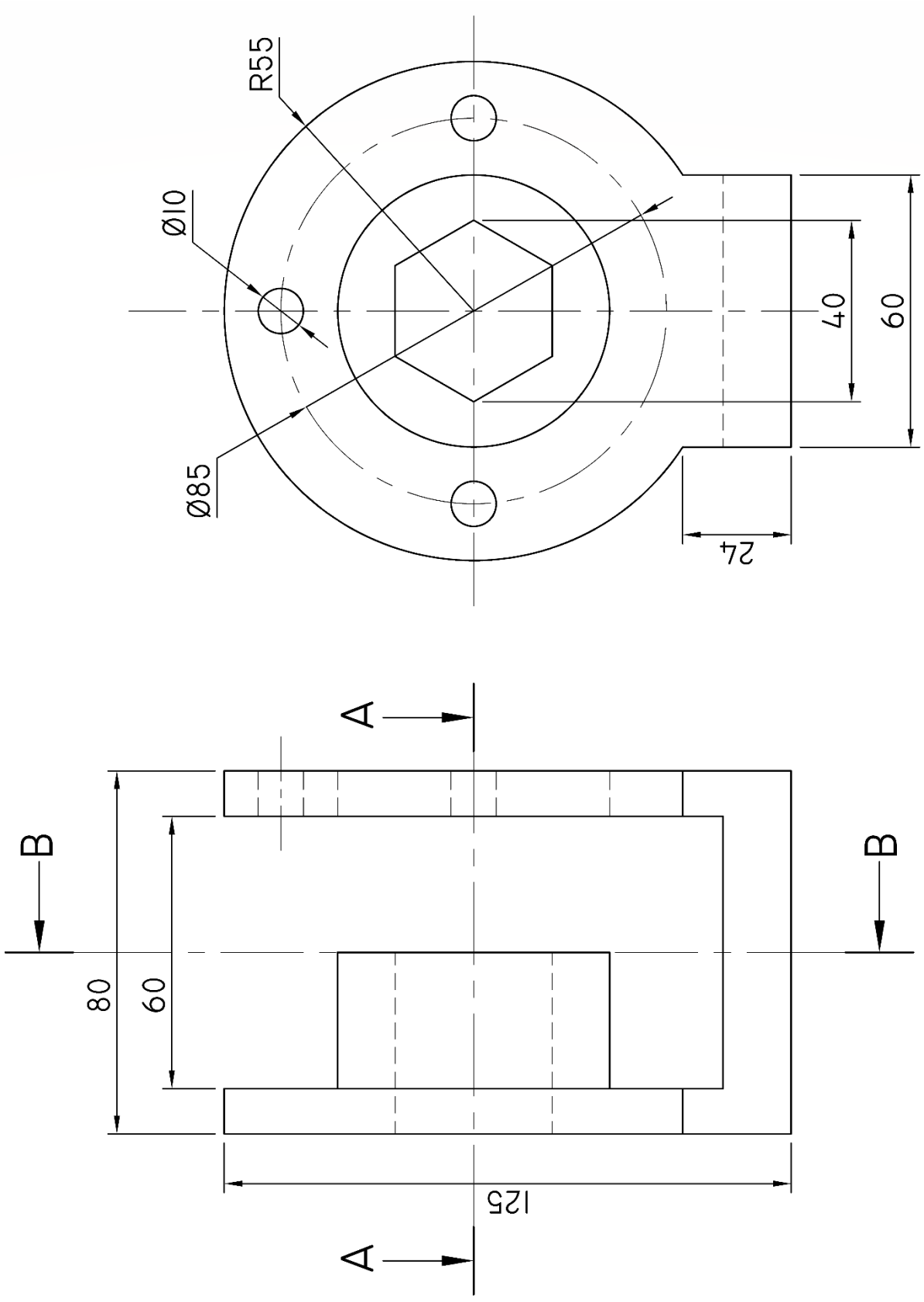

FIGURE 6

TOTAL: 100

Copyright reserved

ANSWER SHEET **EXAMINATION NUMBER:** | | | | | | | | | | | | | |

QUESTION 1

1.1 1.1.1 _____

_____

1.1.2 _____

_____

1.1.3 _____

_____

1.1.4 _____

_____

(4 × 1) (4)

1.2

(3)

1.3

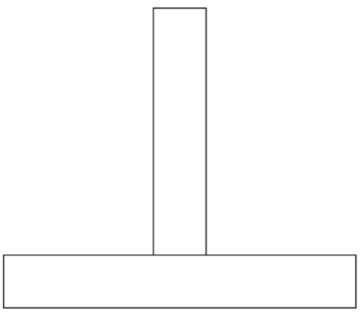

FIGURE 1 (3)

ANSWER SHEET EXAMINATION NUMBER: | | | | | | | | | | | | | |

1.4

(4)
[14]

Copyright reserved