higher education & training

Department:
Higher Education and Training
REPUBLIC OF SOUTH AFRICA

MARKING GUIDELINE

NATIONAL CERTIFICATE

ENGINEERING DRAWING N2

29 November 2022

This marking guideline consists of 10 pages.

Copyright reserved

√ ½ mark
✓ 1 mark

QUESTION 1

1.1 1.1.1 A CPU or Central Processing Unit is the computer hardware that processes all a computer's instructions and controls.

1.1.2 A compact disc is used as a read-only optical memory device for a computer system.

1.1.3 A computer keyboard is an input device used to enter characters and functions into the computer system by pressing buttons, or keys.

1.1.4 A plotter is a machine that produces vector graphics drawings.

(4 × 1) (4)

1.2

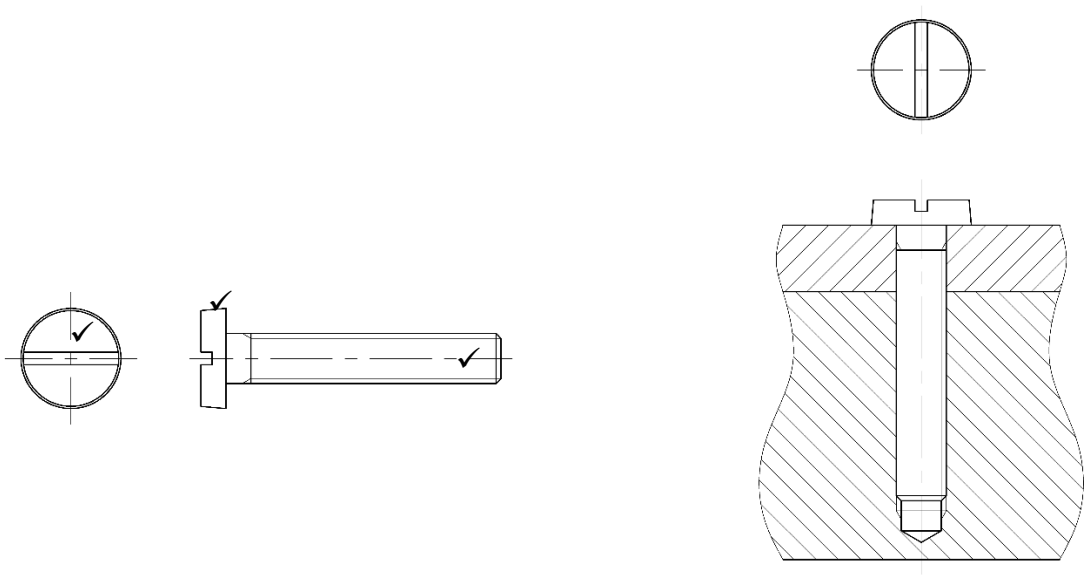

(3)

1.3

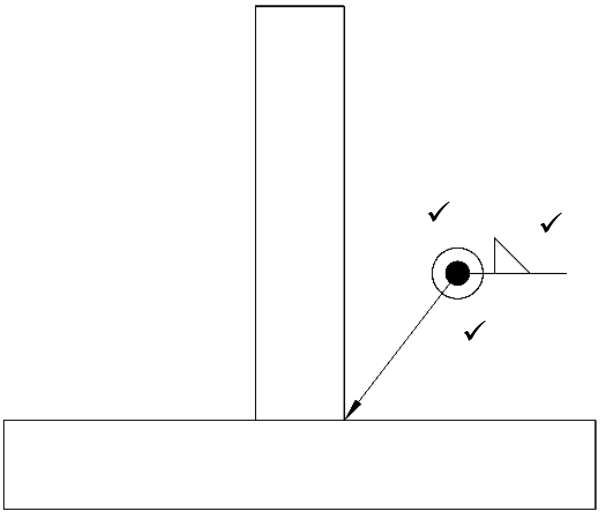

(3)

1.4

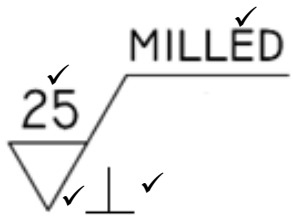

(4)
[14]

QUESTION 2: SCREW THREADS

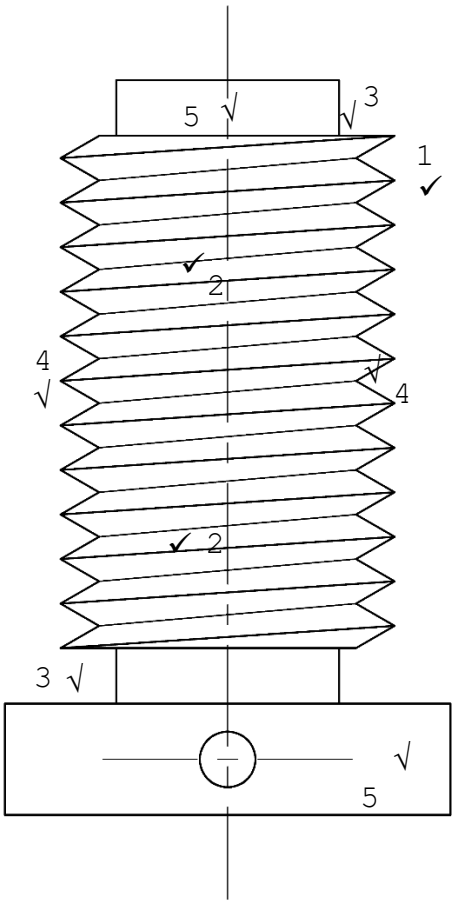

MARKING CRITERIA	
Correctness	6
Line work	2
Accuracy	1
Layout and neatness	1
TOTAL:	**10**

MARK ALLOCATION FOR CORRECTNESS – QUESTION 2

1	1	mark for the direction	1	mark
2	2	marks for the thread detail	2	marks
3	1	mark for start and end detail	1	mark
4	1	mark for pitch	1	mark
5	1	Mark for top and bottom ends of machine bolt	1	mark
		TOTAL	**6**	**marks**

[10]

QUESTION 3: FIRST-ANGLE ORTHOGRAPHIC PROJECTION.

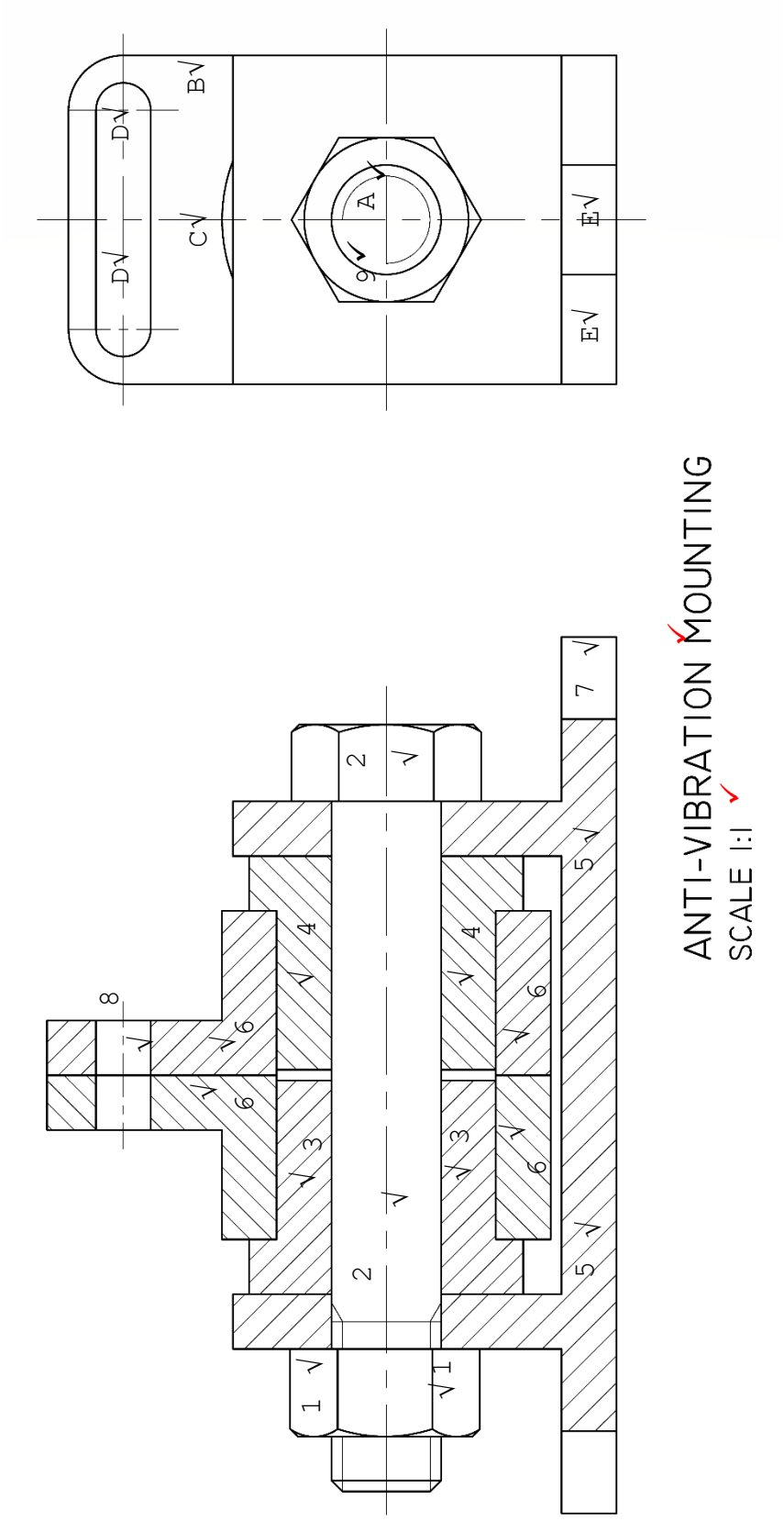

-

MARKING CRITERIA	
Correctness:	
FS FV	8
LV	5
Title and scale	2
Line work	2
Accuracy	2
Layout and neatness	1
TOTAL:	**20**

MARK ALLOCATION FOR CORRECTNESS – QUESTION 3

FS FV

1	1	marks for an M20 nut	1 mark
2	1	mark for bolt	1 mark
3	1	mark for RH bush	1 mark
4	1	mark for LH bush	1 mark
5	1	mark for base	1 mark
6	2	marks for pivot arms	2 marks
7	½	mark for not sectioning slots (base)	½ mark
8	½	mark for not sectioning 10 slot	½ mark
		TOTAL	**8 marks**

LV

9	1	mark for nut	1 mark
A	1	mark for the end of the bolt	1 mark
B	½	mark for the top of the vertical outline	½ mark
C	½	mark for the piece of the pivot arm	½ mark
D	1	mark for the slot on the pivot arm	1 mark
E	1	mark for the base	1 mark
		TOTAL	**5 marks**

[20]

Copyright reserved

QUESTION 4: ISOMETRIC DRAWING

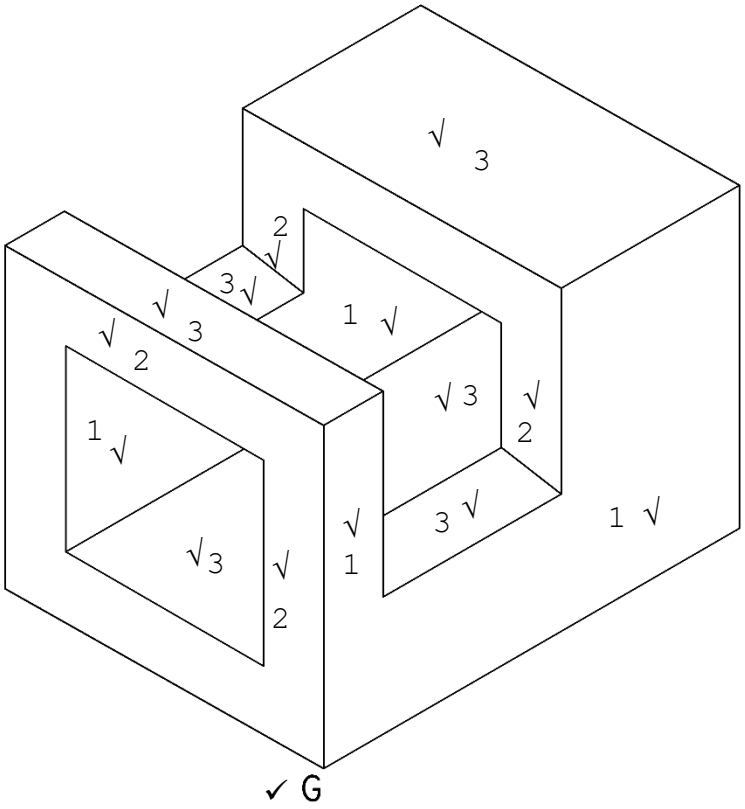

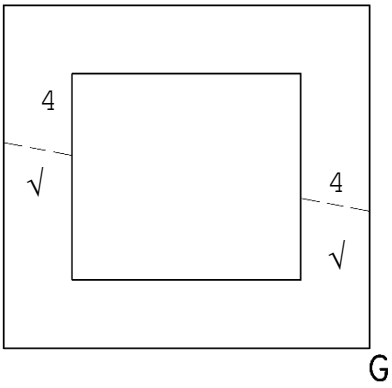

MARKING CRITERIA	
Correctness	8
Point G in the correct position	1
Line work	3
Accuracy	2
Layout and neatness	1
TOTAL:	**15**

MARK ALLOCATION FOR CORRECTNESS – QUESTION 4

1	2	marks for the front view	2 marks
2	2	marks for the left view	2 marks
3	3	marks for the top view	3 marks
4	1	mark for the auxiliary view	1 mark
		TOTAL	**8 marks**

[15]

QUESTION 5: INTERPENETRATION

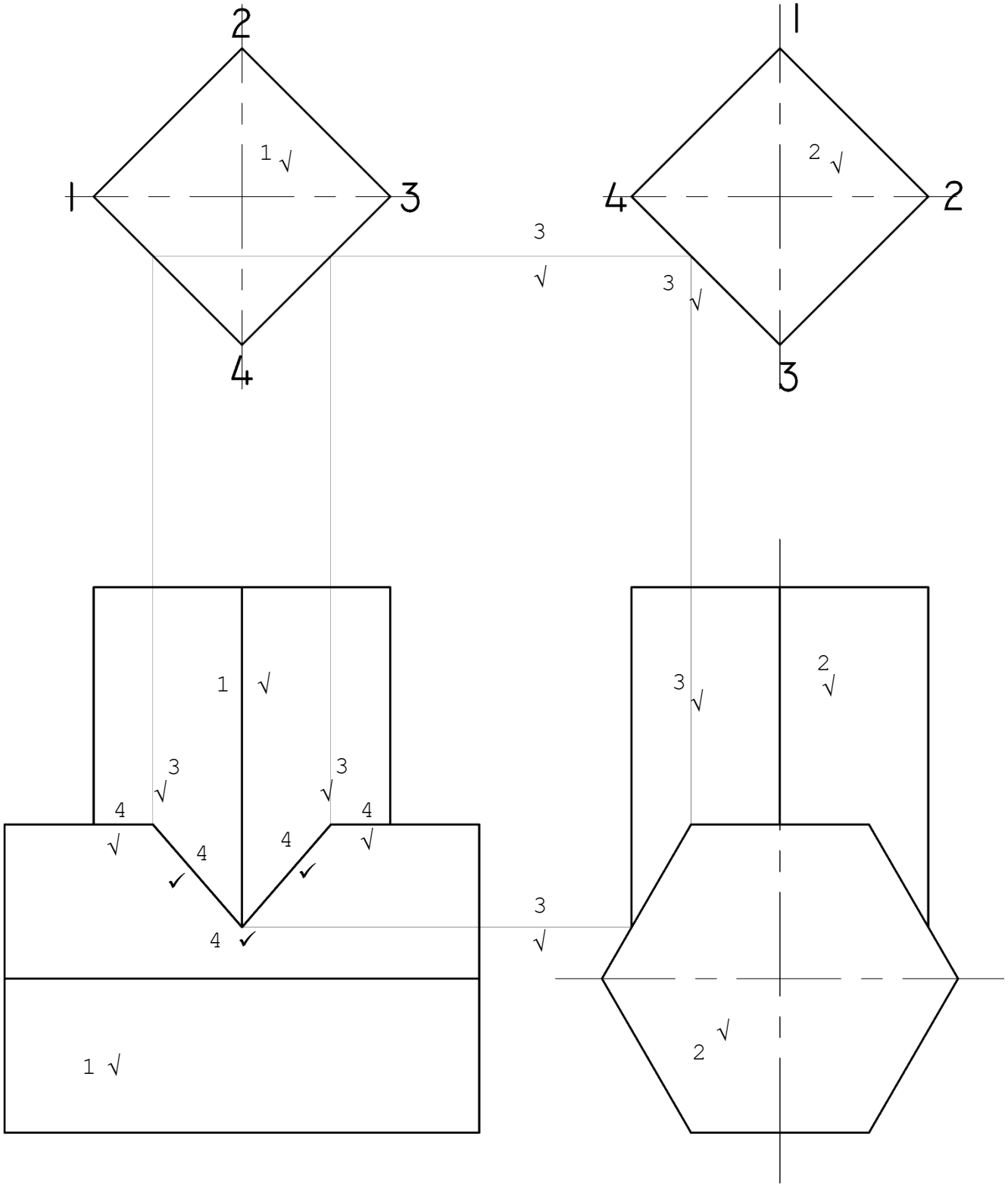

MARKING CRITERIA	
Correctness:	
FV, RV	3
Construction lines (to project curve)	3
Interpenetration curve	4
Line work	2
Accuracy	2
Layout and neatness	1
TOTAL:	**15**

MARK **ALLOCATION**

FOR CORRECTNESS – QUESTION 5

1	1½	mark for the front view	1½ mark
2	1½	mark for the right view	1½ mark
3	3	marks for the construction lines (to project the curve)	3 marks
4	4	marks for the interpenetration curve	4 marks
		TOTAL	**10 marks**

[15]

QUESTION 6: THIRD-ANGLE ORTHOGRAPHIC PROJECTION

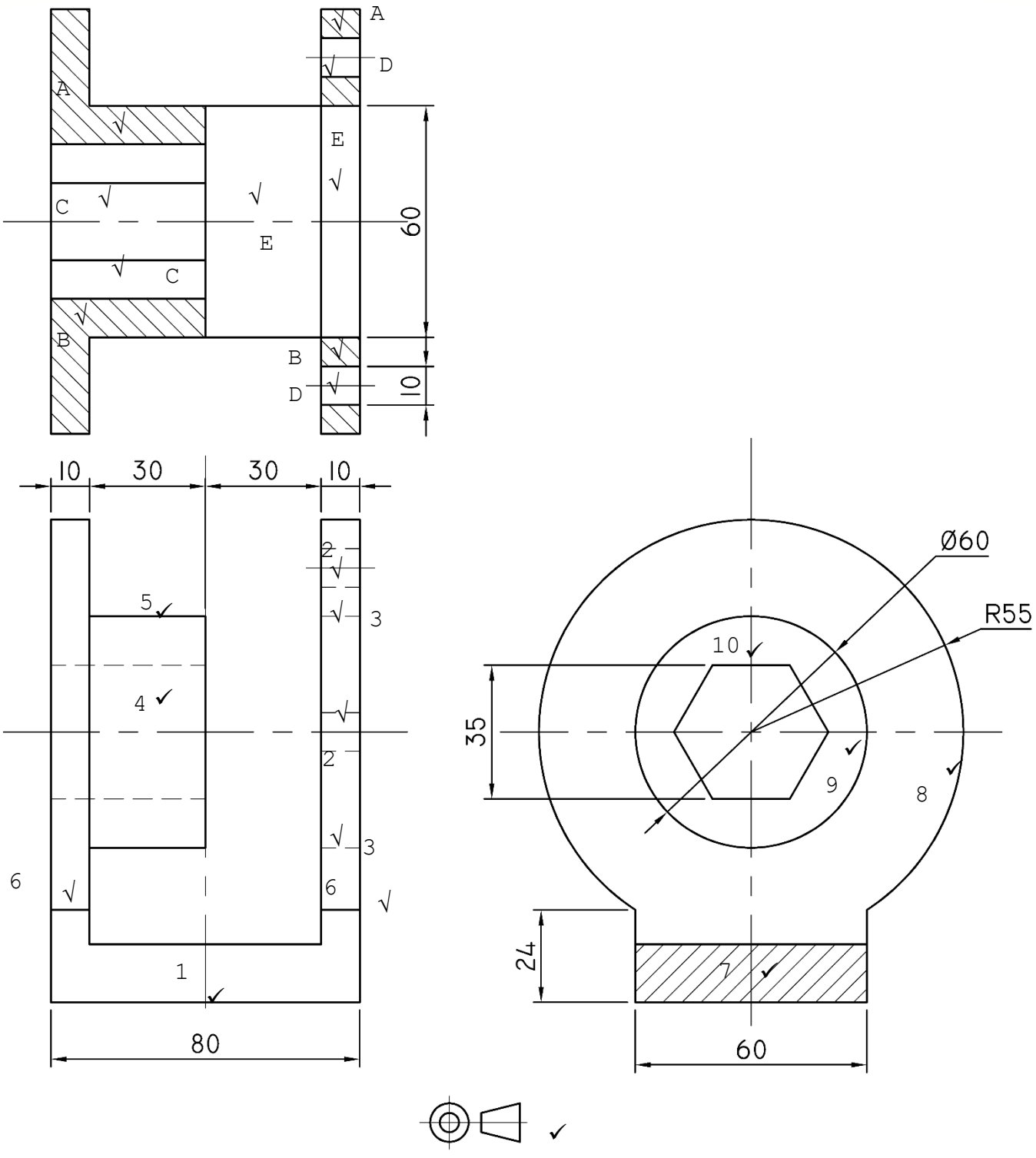

MARKING CRITERIA	
Correctness:	
FV	6
S-RV	4
S-TV	5
Projection symbol	1
Dimensions (6 x ½ marks)	3
Line work	3
Accuracy	3
Layout and neatness	1
TOTAL:	**26**

MARK ALLOCATION FOR CORRECTNESS – QUESTION 6

FV

1	1	mark for base	1	mark
2	1	mark for hidden detail of Ø10 holes	1	mark
3	1	mark for hidden detail of Ø60 hole	1	mark
4	1	mark for the hidden detail of the hexagonal hole	1	mark
5	1	mark for the solid round extended part (Ø60)	1	mark
6	1	mark for the vertical sides with the join line	1	mark
		TOTAL	**6**	**marks**

S-RV

7	1	mark for sectioning	1	mark
8	1	mark for R55 arc	1	mark
9	1	mark for Ø60 circle	1	mark
10	1	mark for hexagon	1	mark
		TOTAL	**4**	**marks**

S-TV

A	1	mark for TOP HALF sectioning	1	mark
B	1	mark for BOTTOM HALF sectioning	1	mark
C	1	mark for the hexagonal hole	1	mark
D	1	mark for Ø10 holes	1	mark
E	1	mark for base and Ø60 hole	1	mark
		TOTAL	**5**	**marks**

[26]

TOTAL: 100

Copyright reserved