higher education & training

Department:
Higher Education and Training
REPUBLIC OF SOUTH AFRICA

NATIONAL CERTIFICATE

ENGINEERING DRAWING N2

(8090272)

06 December 2023 (X-paper)
09:00–13:00

Requirements: ONE A2 drawing sheet (BOE 8/20)

Calculator and drawing instruments may be used.

This question paper consists of 10 pages and an answer sheet.

284Q1G2306

Copyright reserved

DEPARTMENT OF HIGHER EDUCATION AND TRAINING
REPUBLIC OF SOUTH AFRICA

NATIONAL CERTIFICATE
ENGINEERING DRAWING N2
TIME: 4 HOURS
MARKS: 100

INSTRUCTIONS AND INFORMATION

1. Answer all the questions.
2. Read all the questions carefully.
3. Number the answers according to the numbering system used in this question paper.
4. Use both sides of the DRAWING SHEET.
5. Draw a 15 mm border on BOTH SIDES of the DRAWING SHEET.
6. Unspecified radii must be R3.
7. Complete only candidate information in ink and all other drawing work in pencil on the DRAWING SHEET.
8. All drawings must conform to the latest SANS 10111 Code of Practice for Engineering Drawing.
9. A balanced layout is very important, and candidates will be penalised for poor planning.
10. Work neatly.

Copyright reserved

QUESTION 1: FUNDAMENTALS OF ENGINEERING DRAWING, ELECTRICAL FITTINGS, FASTENING DEVICES AND WELDING SYMBOLS

NOTE: Answer this question on the attached ANSWER SHEET and submit it with the DRAWING SHEET.

1.1 Draw a neat freehand drawing of a 20 mm PVC two-way junction box. (4)

1.2 Identify the different types of welding joints by only writing the correct answer on the ANSWER SHEET provided.

1.2.1

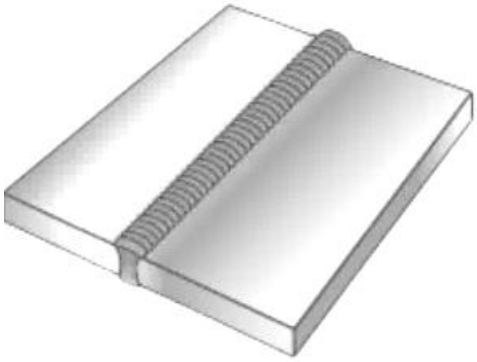

(1)

1.2.2

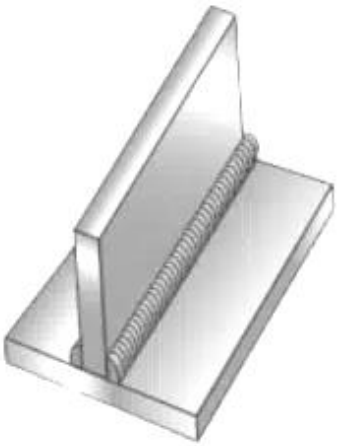

(1)

1.2.3



(1)

1.2.4



(1)

1.3 Identify the different types of locking devices by only writing the correct answer on the ANSWER SHEET provided.

1.3.1

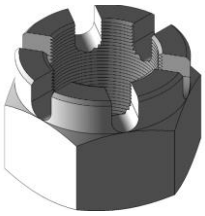

(1)

1.3.2



(1)

1.3.3

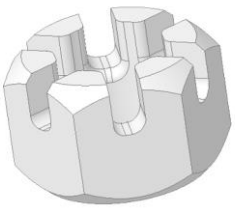

(1)

1.4 Give the basic function of the following hardware ~~as~~ used in computer aided draughting (CAD).

1.4.1 CPU (1)

1.4.2 Printer (1)

1.4.3 Keyboard (1)

1.4.4 Monitor (1)

[15]

QUESTION 2: SCREW THREADS

Draw to scale 1:1, a 98 mm length single start internal right-hand square-screw thread. The nominal diameter is 70 mm, and the pitch is 14 mm. The diameter of the material to be machined is 90 mm.

Draw the screw thread in a horizontal position. **[10]**

QUESTION 3: FIRST-ANGLE ORTHOGRAPHIC PROJECTION

FIGURE 1 shows an outside front view and an outside left view of a PULLEY ASSEMBLY with the M16 bolt and nut assembly not shown.

3.1 Draw, to scale 1:1 the following views in first angle orthographic projection:

3.1.1 A sectional front view on cutting plane A-A, showing the M16 bolt and nut assembly. (7)

3.1.2 An outside left view, showing the M16 bolt and nut assembly. Show hidden detail in this view. (5)

3.2 Insert the following title and scale centrally beneath the layout:

PULLEY ASSEMBLY
SCALE 1:1 (2)

3.3 Draw the symbol for the first-angle orthographic projection beneath the layout. (1)

3.4 Layout, neatness, linework and accuracy. (6)

[21]

Copyright reserved

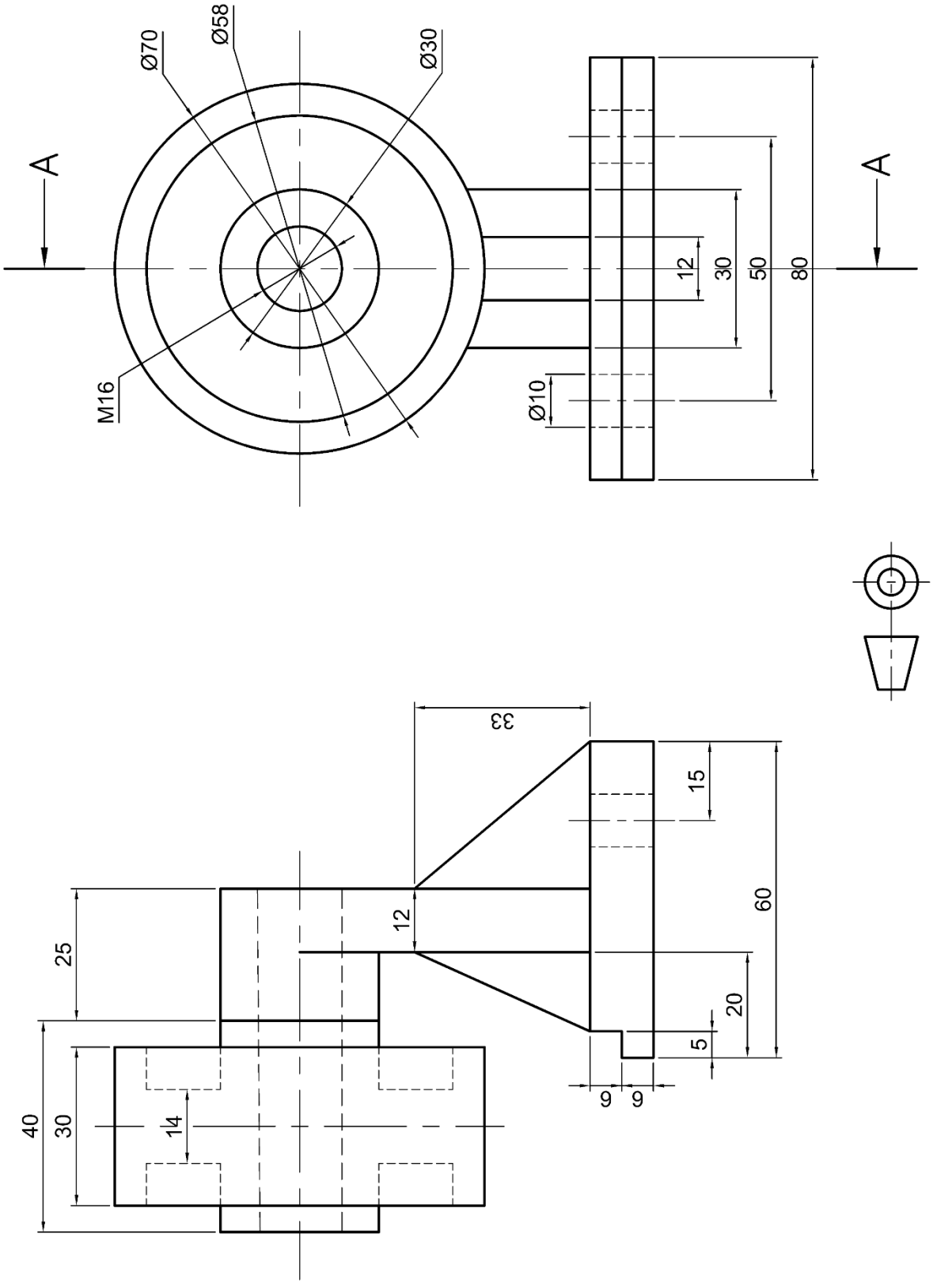

FIGURE 1

QUESTION 4: ISOMETRIC PROJECTION

FIGURE 2 below shows TWO views of a machined component drawn in first-angle orthographic projection.

Do not draw the given views of the component but draw to scale 1:1 an isometric view of the component. Point P must be the lowest point.

Construction lines of the Ø32 hole must be shown.

NO hidden detail is required. **[15]**

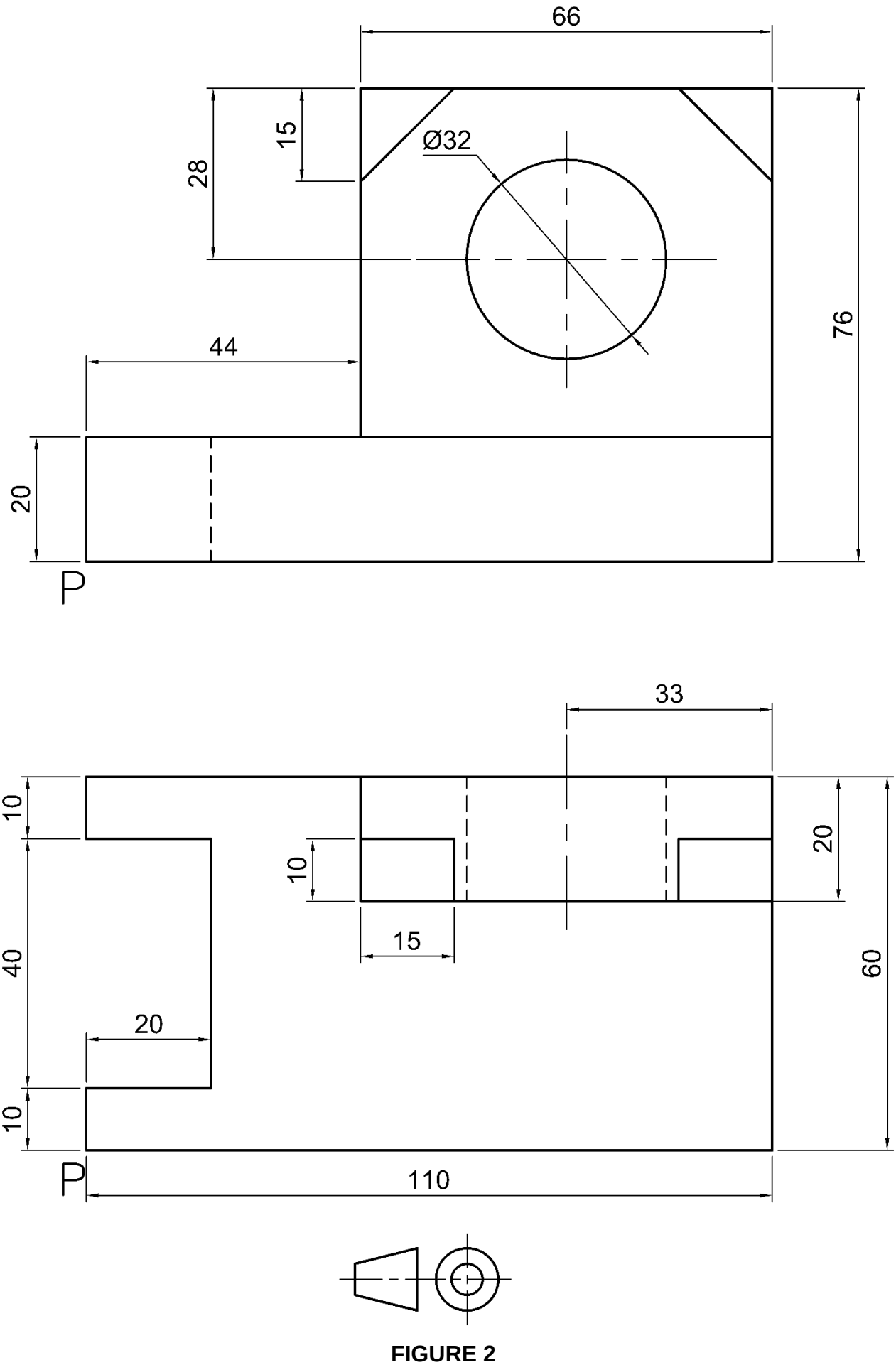

FIGURE 2

Copyright reserved

QUESTION 5: INTERPENETRATION

FIGURE 3 below shows two views of a rod-end without the interpenetration lines in third-angle orthographic projection.

5.1 Redraw the two views in third angle orthographic projection to scale 1:1. (2)

5.2 Show all the construction lines needed to project the curve of interpenetration. (4)

5.3 Draw the interpenetration curve on the front view. (3)

5.4 Linework, accuracy, layout, and neatness. (5)

[14]

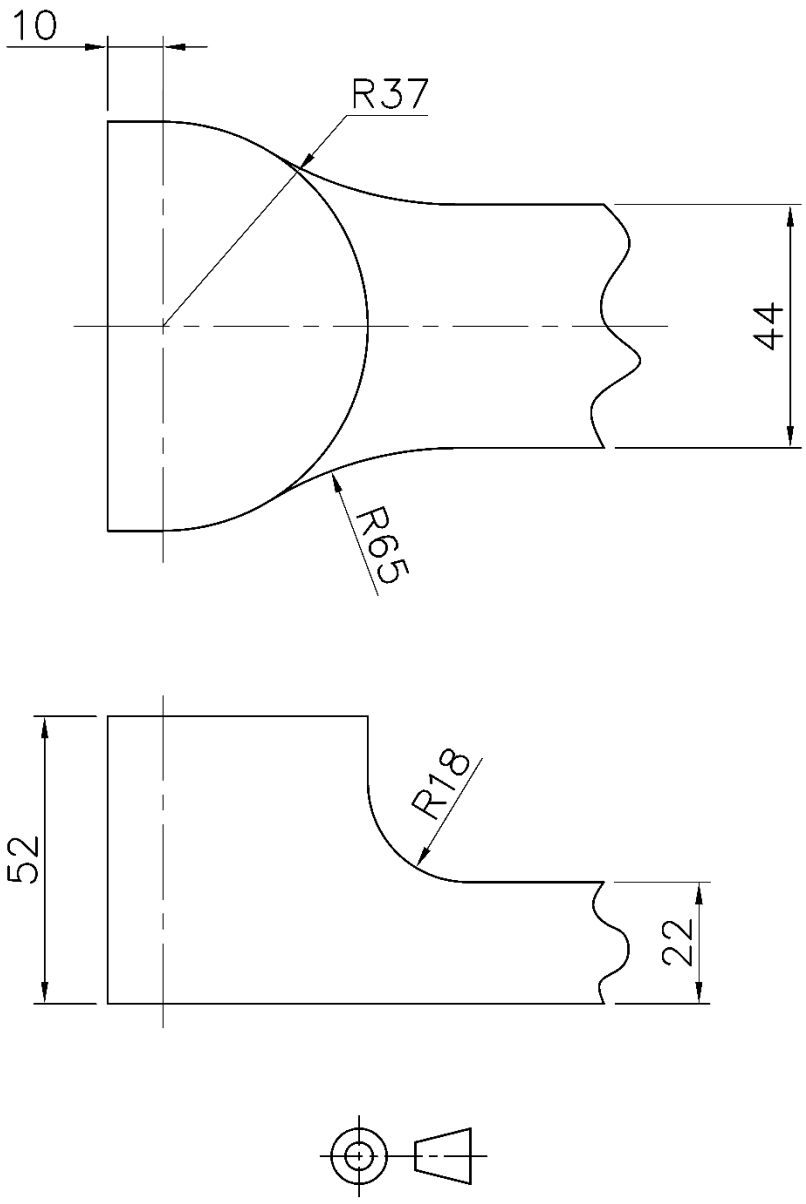

FIGURE 3

QUESTION 6: THIRD-ANGLE ORTHOGRAPHIC PROJECTION AND MACHINING SURFACE TEXTURE SYMBOLS

FIGURE 4 below shows two views of a SHAFT GUIDE.

Draw to scale 2:1 and in third-angle orthographic projection the following views of the SHAFT GUIDE.

6.1	A full sectional front view on cutting plane A-A	(4)
6.2	An outside TOP view, no hidden detail necessary.	(3)
6.3	A half-sectional right view on cutting plane B-B, with the right-half in section. No hidden detail required on half not sectioned.	(5)
6.4	Insert any SIX dimensions and distribute them equally on all the views.	(3)
6.5	At C add a machining surface texture symbol that would indicate the material have to be removed by machining until a surface texture of 4.2µm is achieved. Also indicate the sampling length must be 0,7 mm.	(3)
6.6	Insert the third-angle orthographic projection symbol below the title and scale.	(1)
6.7	Layout, neatness, linework and accuracy.	(6)

[25]

Copyright reserved

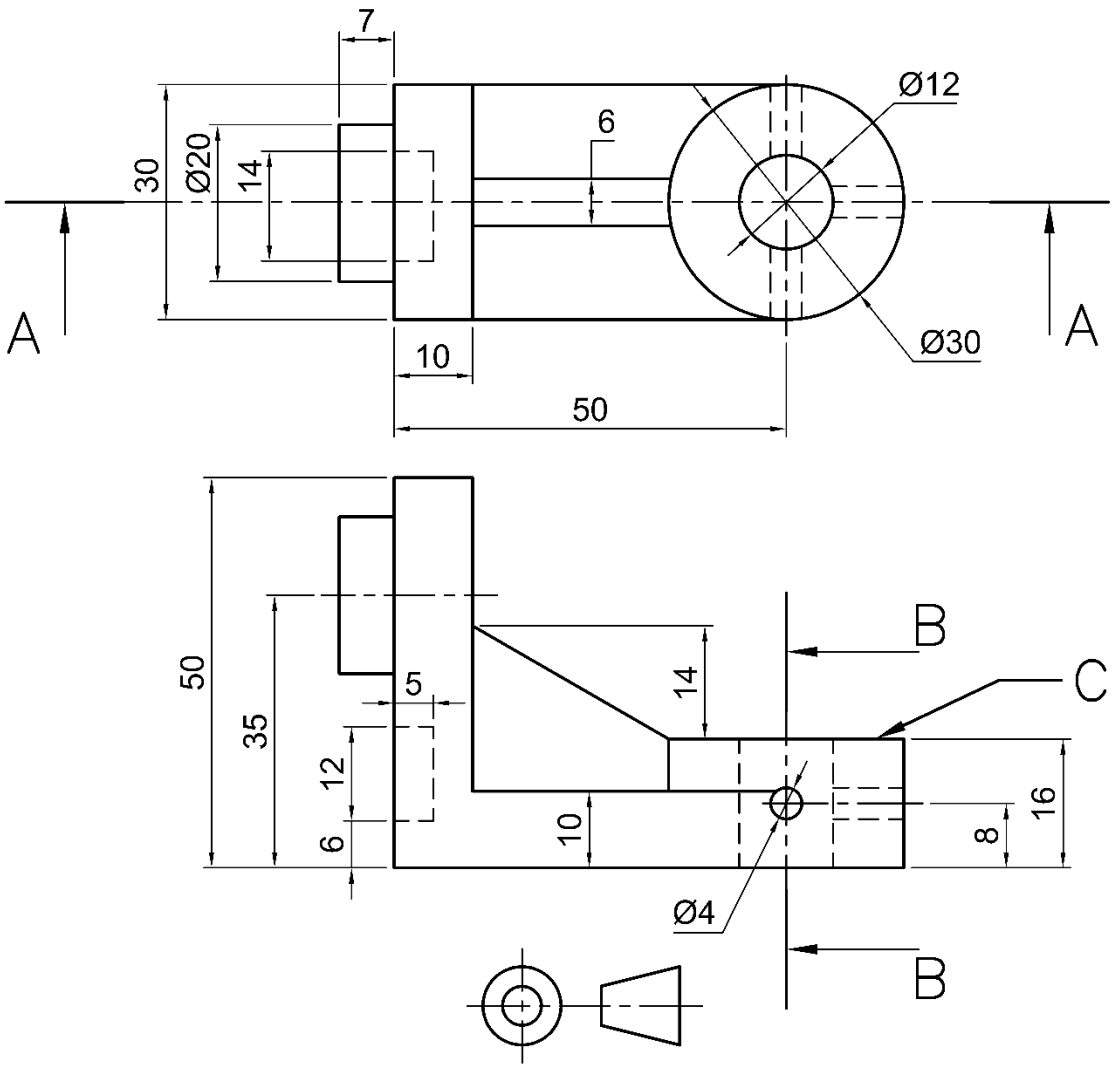

FIGURE 4

TOTAL: 100

Copyright reserved

(8090272)

ANSWER SHEET: EXAMINATION NUMBER:

QUESTION 1: CENTRE NUMBER: 9 9 9 9

1.1

(3)

1.2 1.2.1 _____ (1)

1.2.2 _____ (1)

1.2.3 _____ (1)

1.2.4 _____ (1)

1.3 1.3.1 _____ (1)

1.3.2 _____ (1)

1.3.3 _____ (1)

Copyright reserved

1.4 1.4.1 _____

_____ (1)

1.4.2 _____

_____ (1)

1.4.3 _____

_____ (1)

1.4.4 _____

_____ (1)

1.4.5 _____

_____ (1)

[15]

Copyright reserved