higher education & training

Department:
Higher Education and Training
REPUBLIC OF SOUTH AFRICA

MARKING GUIDELINE

NATIONAL CERTIFICATE

ENGINEERING DRAWING N2

06 December 2023

This marking guideline consists of 12 pages.

√ ½ mark
✓ 1 mark

NOTE: Scanning and copying of drawings from DRAWING PROGRAMS may affect accuracy, therefore. Marking Centre Managers are urged to ensure that ALL markers prepare their own marking guidelines to mark candidates' work.

Copyright reserved

QUESTION 1: FUNDAMENTALS OF ENGINEERING DRAWING, ELECTRICAL FITTINGS AND WELDING SYMBOLS

ANSWER SHEET:

1.1

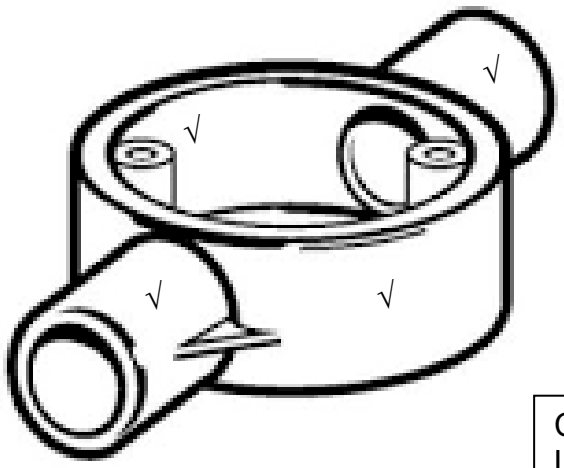

CORRECTNESS: 2
LINE WORK: 1
ACCURACY: 1

(4)

1.2 1.2.1 BUTT JOINT✓ (1)

1.2.2 T JOINT✓ (1)

1.2.3 CORNER JOINT✓ (1)

1.2.4 LAP JOINT✓ (1)

1.3 1.3.1 CASTLE NUT✓ (1)

1.3.2 SIMMONDS NUT✓ (1)

1.3.3 SLOTTED NUT✓ (1)

1.4	1.4.1	HARDWARE THAT PERFORMS FUNCTIONS RELATED TO INPUT AND OUTPUT, PROCESSING AND STORING DATA. ✓	(1)
	1.4.2	ITS MAIN PURPOSE IS TO PRODUCE HARD-COPY DOCUMENTS AND IMAGES FROM DIGITAL FILES. ✓	(1)
	1.4.3	AN INPUT DEVICE TO ENTER LETTERS, NUMBERS, AND OTHER SYMBOLS INTO A COMPUTER. ✓	(1)
	1.4.4	AN OUTPUT DEVICE THAT DISPLAYS INFORMATION IN PICTORIAL OR TEXTUAL FORM. ✓	(1)

[15]

QUESTION 2: SCREW THREADS

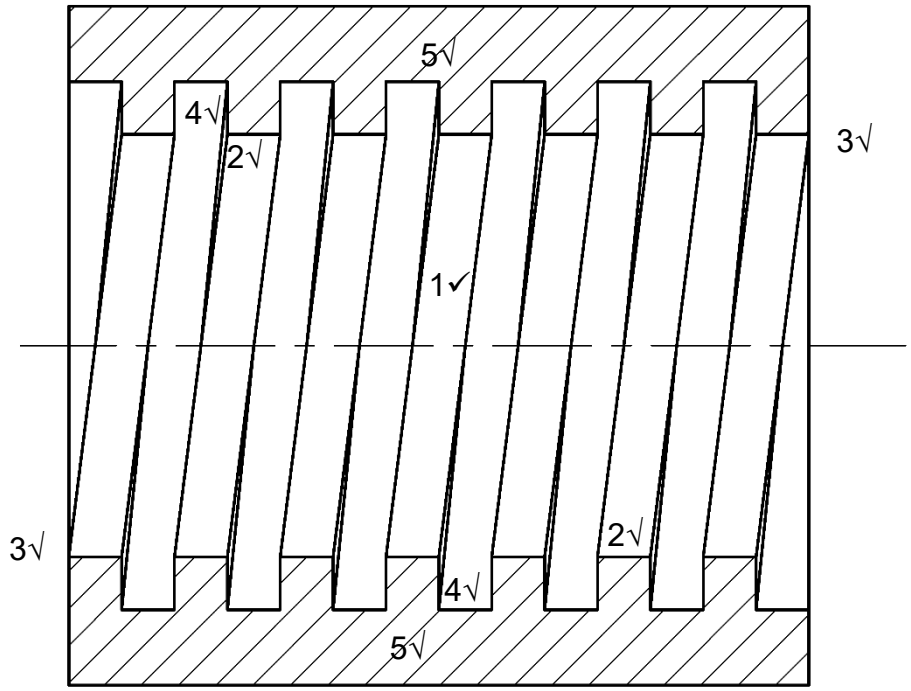

MARKING CRITERIA	
Correctness	5
Line work	2
Accuracy	2
Layout and Neatness	1
TOTAL:	**10**

MARK ALLOCATION FOR CORRECTNESS – QUESTION 2

1.	1 mark for the direction	1 mark
2.	1 mark for the thread detail	1 mark
3.	1 mark for start and end detail	1 mark
4.	1 mark for pitch	1 mark
5.	1 mark for sectioning	1 mark
	TOTAL	**5 marks**

QUESTION 3: FIRST-ANGLE ORTHOGRAPHIC PROJECTION

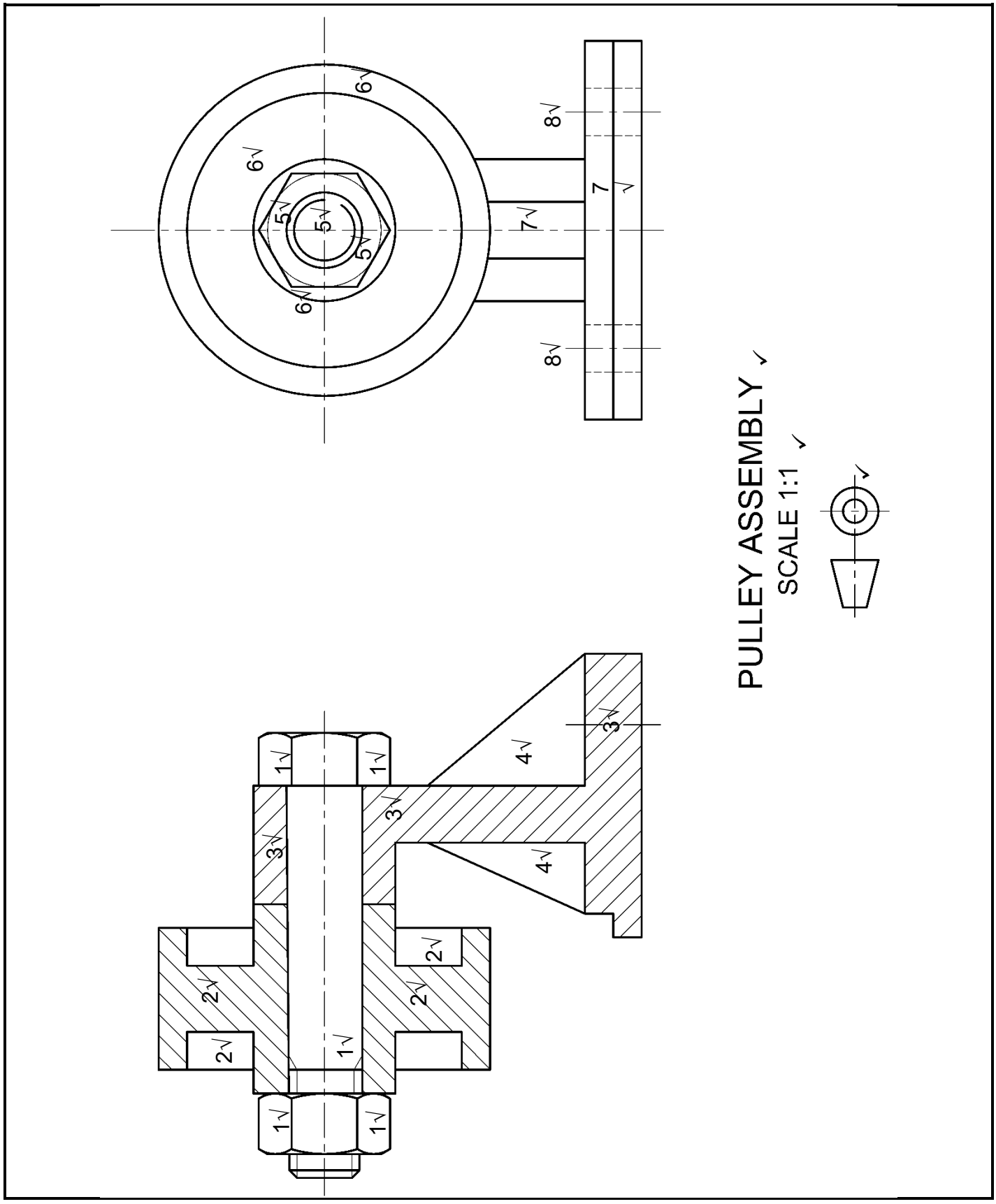

MARKING CRITERIA	
Correctness:	
FS FV	7
LV	5
Title and Scale	2
FAOP symbol	1
Line work	3
Accuracy	2
Layout and neatness	1
TOTAL:	**21**

MARK ALLOCATION FOR CORRECTNESS – QUESTION 3

FS FV

1.	2½	marks for M16 bolt & nut assembly	2½	marks
2.	2	marks for the sectioned pulley and parts not sectioned	2	marks
3.	1½	marks for the sectioned foot piece	1½	marks
4.	1	mark for ribs	1	mark
		TOTAL	**7**	**marks**

LV

5.	1½	marks for nut and thread detail.	1½	marks
6.	1½	marks for the pulley.	1½	marks
7.	1	mark for the foot piece.	1	mark
8.	1	mark for the Ø10 hidden detail.	1	mark
		TOTAL	**5**	**marks**

Copyright reserved

QUESTION 4: ISOMETRIC

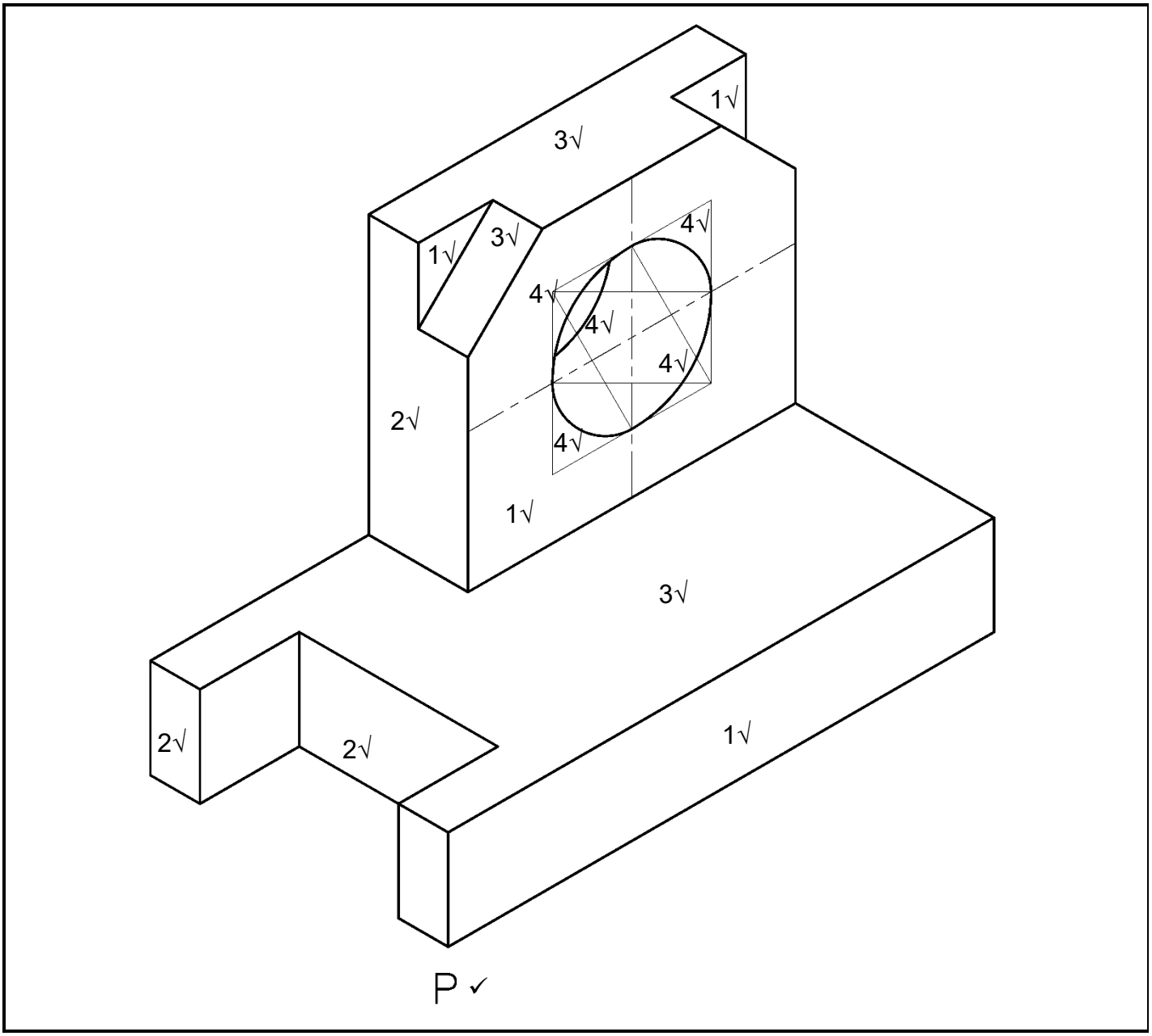

MARKING CRITERIA	
Correctness	7½
Point P in correct position	1
Line work	3
Accuracy	2
Layout and Neatness	1½
TOTAL:	**15**

MARK ALLOCATION FOR CORRECTNESS – QUESTION 4

1	2	marks for the front view	2	marks
2	1½	marks for the left view	1½	marks
3	1½	marks for the top view	1½	marks
4	2½	marks for the circle & circle construction	2½	marks
		TOTAL	**7½**	**marks**

QUESTION 5: INTERPENETRATION

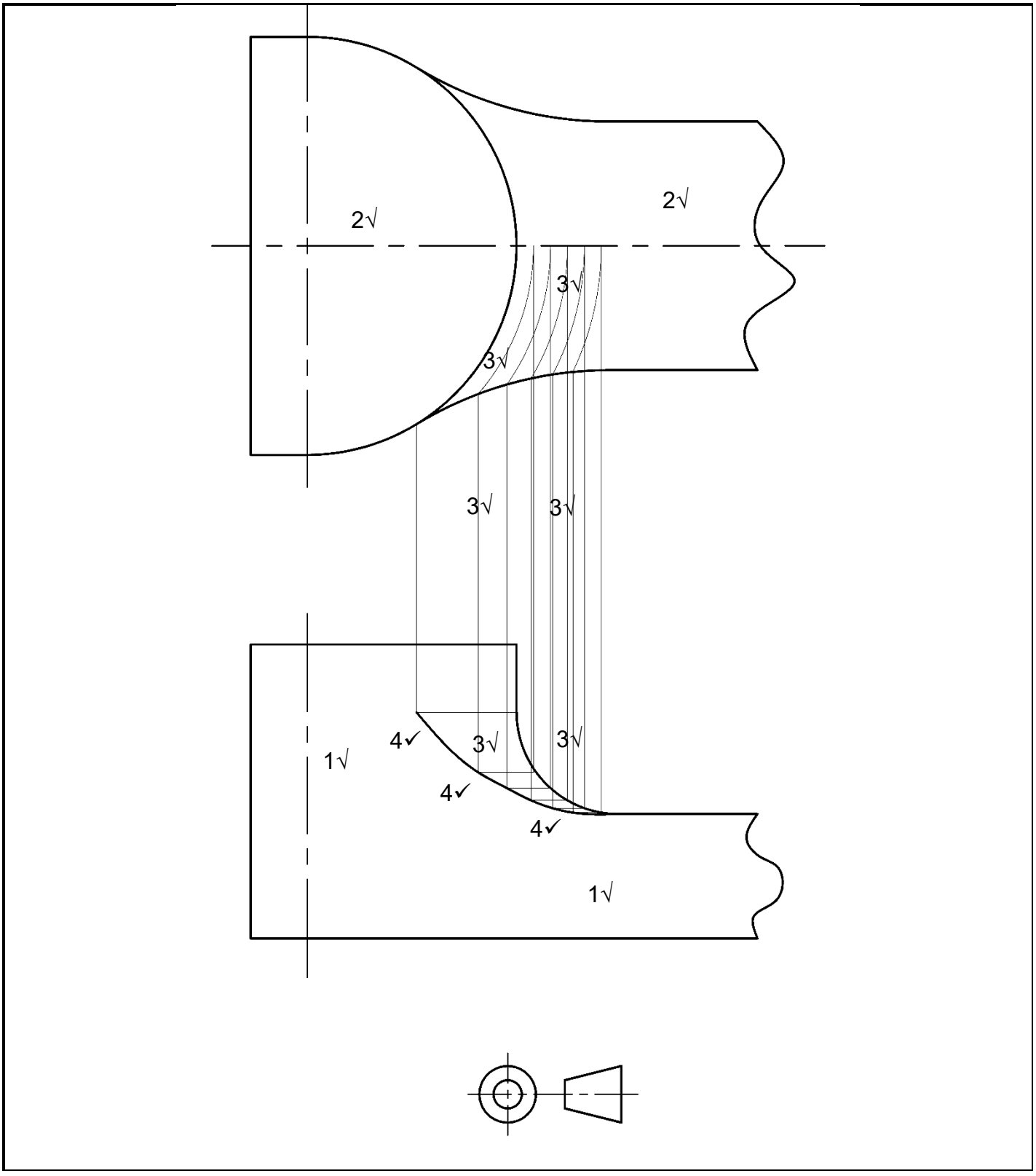

MARKING CRITERIA	
Correctness:	
FV, TV	2
Construction lines (to project curve)	4
Interpenetration Curve	3
Line work	2
Accuracy	2
Layout and neatness	1
TOTAL:	**14**

MARK ALLOCATION FOR CORRECTNESS – QUESTION 5

1.	1	mark for the FRONT view	1 mark
2.	1	mark for the TOP view	1 mark
3.	4	marks for the construction lines (to project the curve)	4 marks
4.	3	marks for the interpenetration curves	3 marks
		TOTAL	**9 marks**

QUESTION 6: THIRD-ANGLE ORTHOGRAPHIC PROJECTION

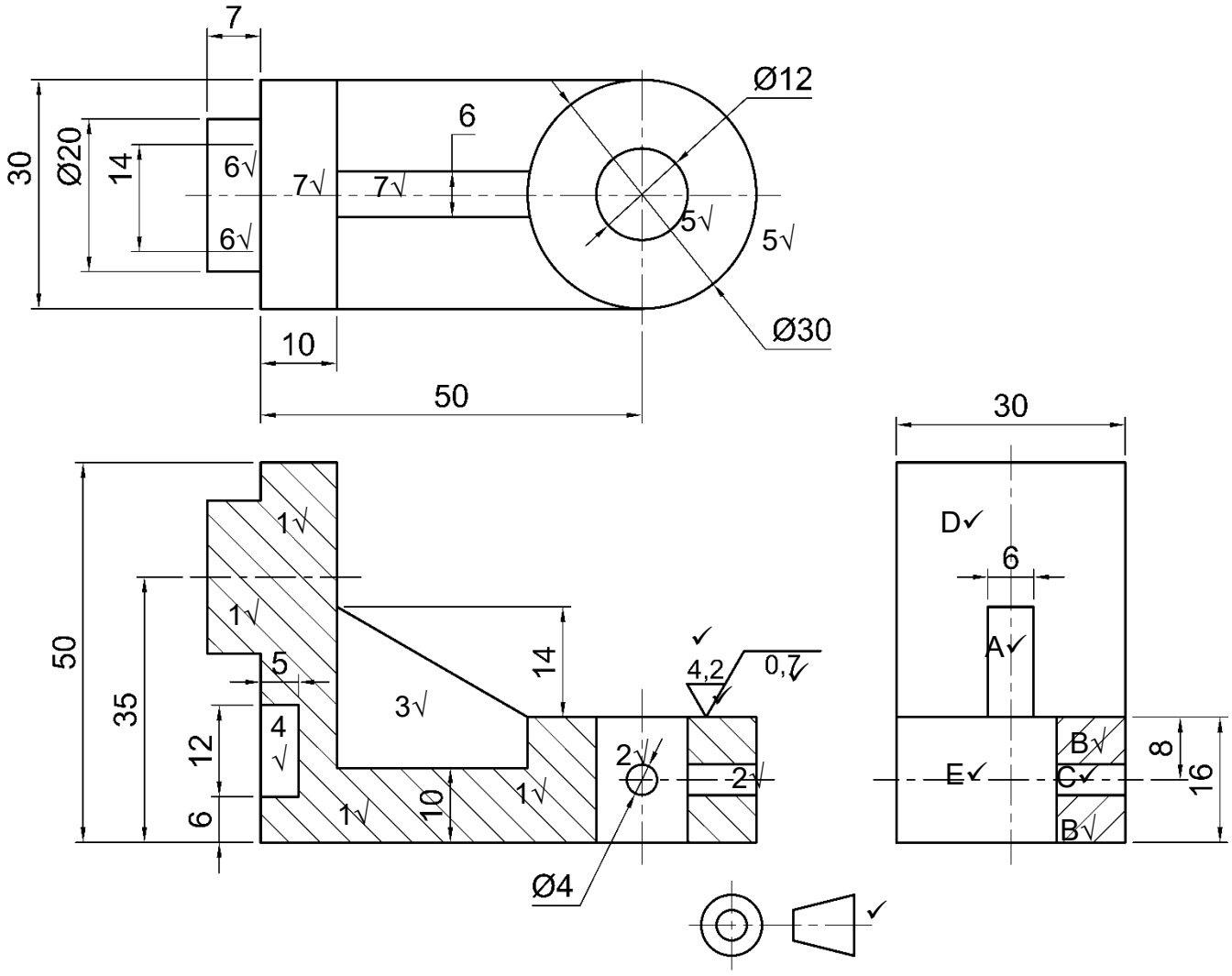

- ½ Mark for each dimension according to scale.
- If candidate gives e.g., dimension Ø8 in FV where it should be Ø4 – no mark to be awarded.
- A total of 1 mark can be awarded if dimension lines, leader lines drawn 100% accurately where dimensions are incorrectly given according to scale, as e.g., dimension Ø8 in FV.

Copyright reserved

MARKING CRITERIA	
Correctness:	
FS - FV	4
TV	3
HS - RV	5
Dimensions	3
Projection symbol	1
Surface texture symbol	3
Line work	3
Accuracy	2
Layout and neatness	1
TOTAL:	**25**

MARK ALLOCATION FOR CORRECTNESS – QUESTION 6

FS - FV.

1.	2	marks for sectioning	2	mark
2.	1	mark for Ø4 holes not sectioned	1	mark
3.	½	mark for rib	½	mark
4.	½	mark for 12 x 5 groove	½	mark
		TOTAL	**4**	**marks**

TV

5.	1	mark for Ø30 & Ø12 circles	1	mark
6.	1	mark for Ø20 circles & inside lines	1	mark
7.	1	mark for rib & connection	1	mark
		TOTAL	**3**	**marks**

HS - RV

A	1	mark for rib	1	mark
B	1	mark for sectioning	1	mark
C	1	mark for Ø4 hole	1	mark
D	1	mark for top part	1	mark
E	1	mark for base not sectioned	1	mark
		TOTAL	**5**	**marks**

TOTAL: 100

Copyright reserved