higher education & training

Department:
Higher Education and Training
REPUBLIC OF SOUTH AFRICA

MARKING GUIDELINE

NATIONAL CERTIFICATE

BUILDING DRAWING N2

16 November 2022

This marking guideline consists of 12 pages.

Copyright reserved

QUESTION 1: FOUNDATION AND FLOORS

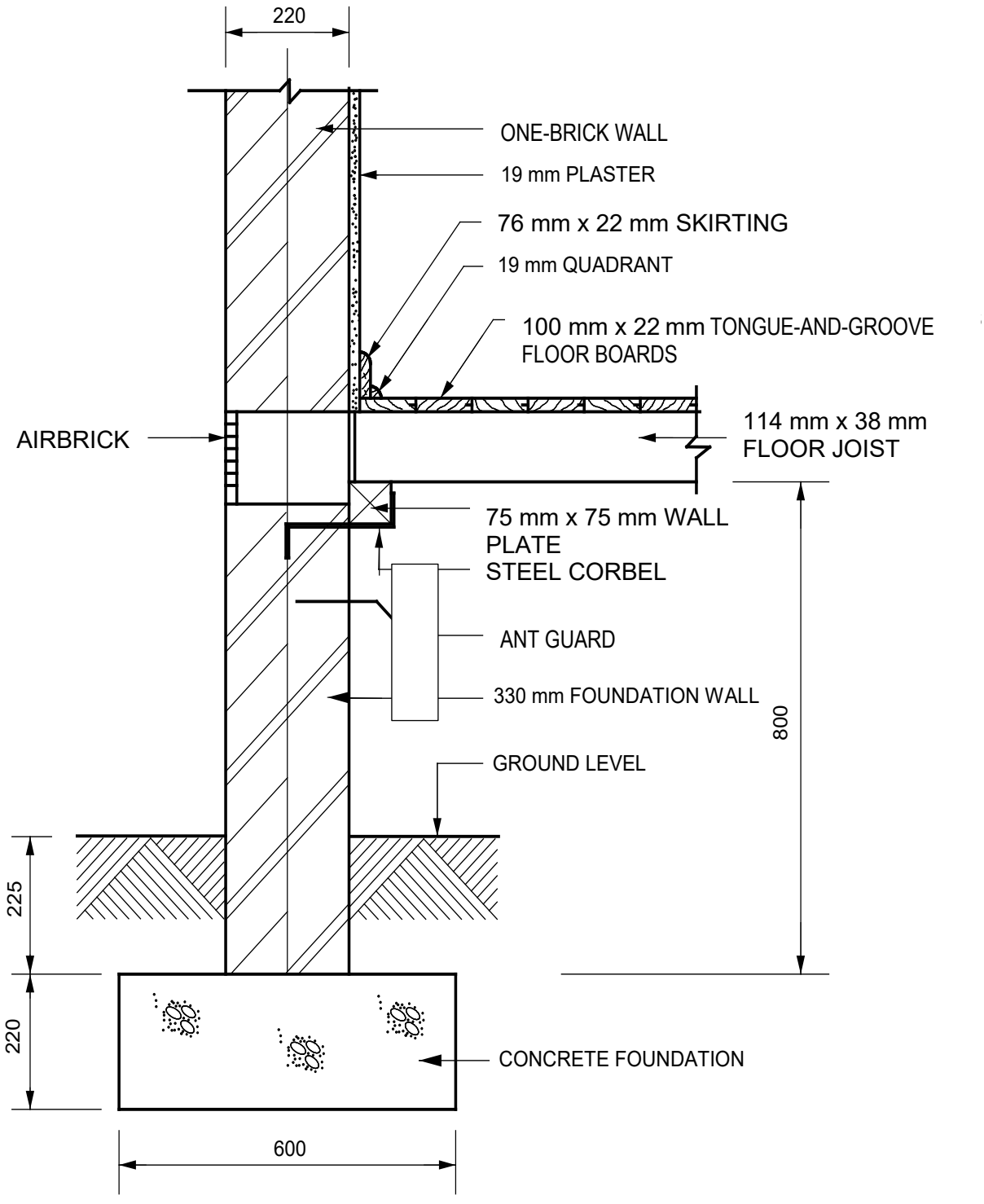

VERTICAL SECTION THROUGH EXTERNAL WALL AND SUSPENDED FLOOR

SCALE 1:10

Copyright reserved

SEE DRAWING FOR MODEL ANSWER

RUBRIC FOR DRAWING QUESTION 1

PART OF THE DRAWING	MARKING CRITERIA	POSSIBLE MARK	MARKER	INTERNAL MODERATOR	INTERNAL MODERATOR
Concrete foundation, Foundation wall, External wall (Superstructure), Ground level	Correct position	4			
	Hatching	4			
	Labelling	4			
Steel corbel, Wall plate, Floor joist, Floor board	Correct position	4			
	Hatching	2			
	Labelling	4			
Plaster, Skirting, Quadrant	Correct position	3			
	Hatching	3			
	Labelling	3			
Ant guard, Airbrick	Correct position	2			
	Labelling	2			
	Dimensions	4			
	Subtotal	**39**			
	Divide by	**3**			
Overall correctness		**13**			
	Accuracy	**6**			
	Line work	**4**			
Balanced layout and neatness		**2**			
	TOTAL	**25**			

NOTE: NO marks should be allocated for any part of the drawing in the incorrect position but marks should be allocated for hatching of that component.

Copyright reserved

QUESTION 2: BRICKWORK

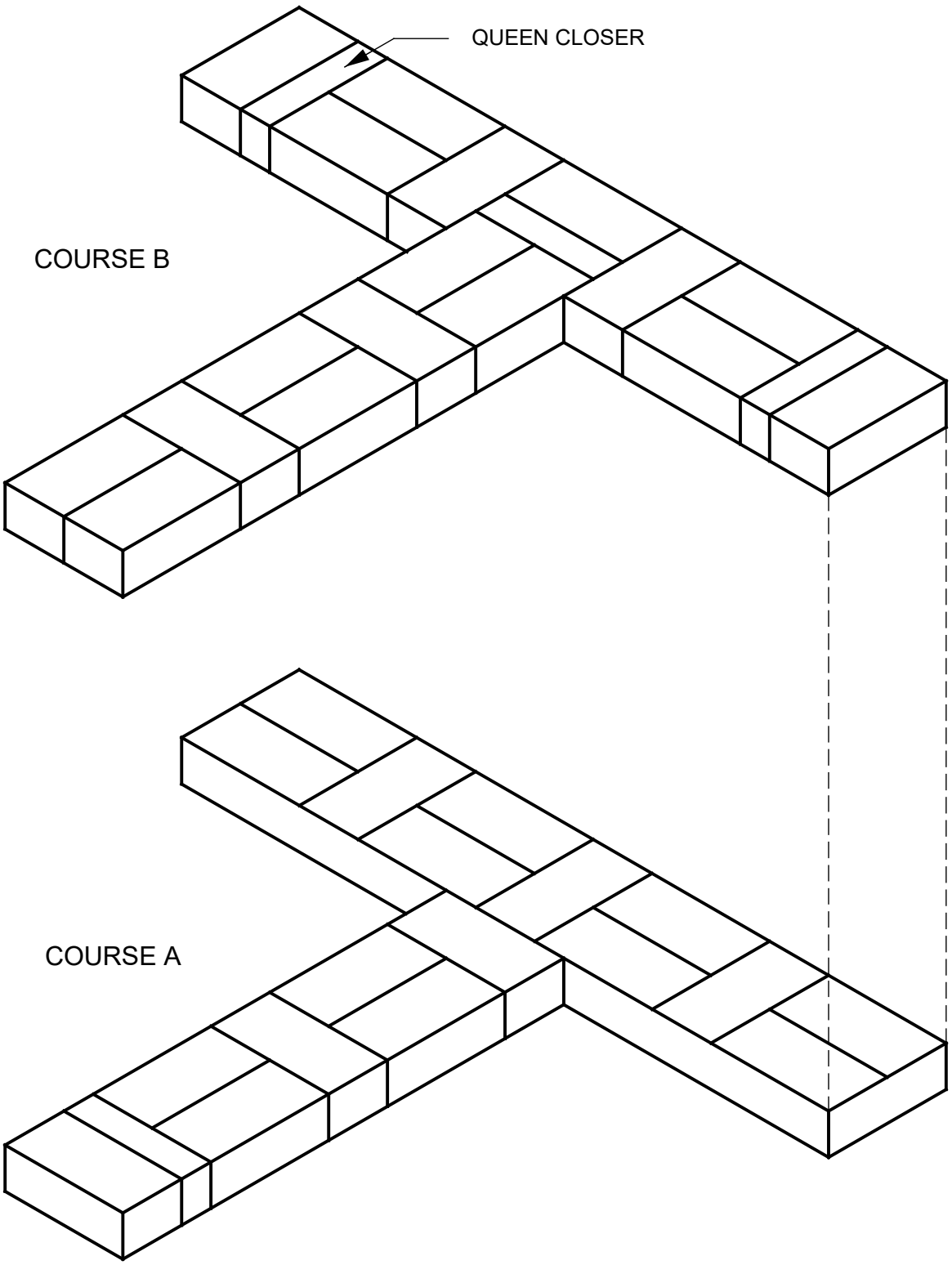

ISOMETRIC VIEW OF A T-JUNCTION, BUILT IN FLEMISH BOND

SCALE 1:10

Copyright reserved

SEE DRAWINGS FOR MODEL ANSWER

RUBRIC FOR DRAWING QUESTION 2

PART OF THE DRAWING	MARKING CRITERIA	POSSIBLE MARK	MARKER	INTERNAL MODERATOR	INTERNAL MODERATOR
Isometric view	Axis	3			
	Alignment	3			
Course A	Correct size	3			
	Brick pattern	2			
	Brick size	1			
	Stopped ends	1			
Course B	Correct size	3			
	Brick pattern	2			
	Brick size	1			
	Stopped ends	2			
Queen closer, titles	Labelling	3			
	Subtotal	**24**			
	Divide by	**3**			
Overall correctness		**8**			
	Accuracy	**4**			
	Line work	**3**			
Balanced layout and neatness		**1**			
	TOTAL	**16**			

NOTE: NO marks should be allocated for any part of the drawing in the incorrect position but marks should be allocated for hatching of that component.

Copyright reserved

QUESTION 3: JOINERY

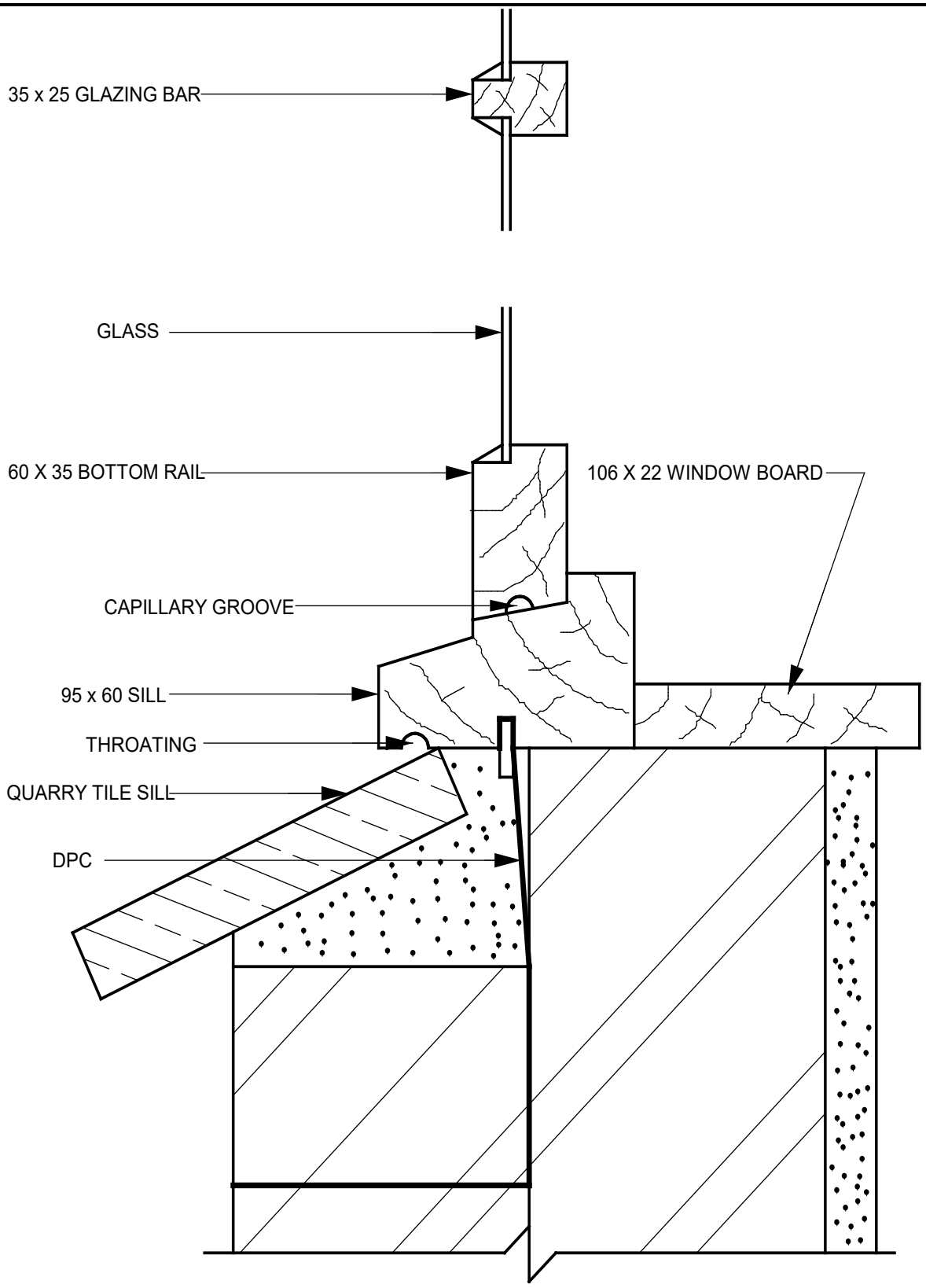

VERTICAL SECTION THROUGH GLAZING BAR AND WINDOW SILL

SCALE 1:2

Copyright reserved

SEE DRAWINGS FOR MODEL ANSWER

RUBRIC FOR DRAWING QUESTION 3

PART OF THE DRAWING	MARKING CRITERIA	POSSIBLE MARK	MARKER	INTERNAL MODERATOR	INTERNAL MODERATOR
Wall, Plaster, Quarry tile sill	Correct position	3			
	Hatching	4			
	Labelling	3			
Sill, Bottom rail, Glazing bar, Glass	Correct position	4			
	Hatching	3			
	Labelling	4			
DPC, Capillary groove, Throating	Correct position	3			
	Labelling	3			
	Subtotal	**27**			
	Divide by	**3**			
Overall correctness		**9**			
	Accuracy	**5**			
	Line work	**3**			
Balanced layout and neatness		**1**			
	TOTAL	**18**			

NOTE: NO marks should be allocated for any part of the drawing in the incorrect position but marks should be allocated for hatching of that component.

Copyright reserved

QUESTION 4: ROOF AND ROOF COVERING

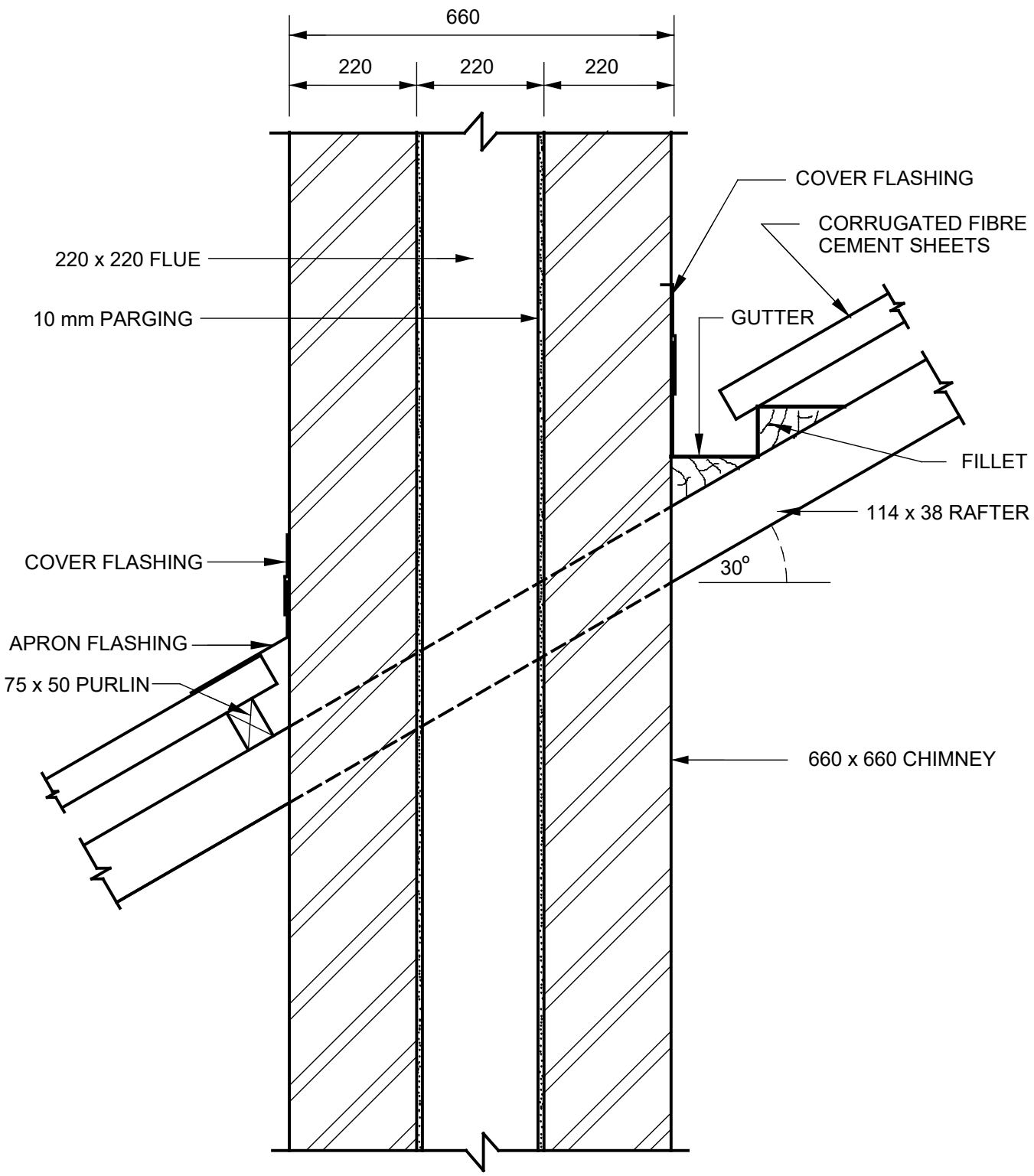

VERTICAL SECTION THROUGH A CHIMNEY

SCALE 1:10

SEE DRAWING FOR MODEL ANSWER

RUBRIC FOR DRAWING QUESTION 4

PART OF THE DRAWING	MARKING CRITERIA	POSSIBLE MARK	MARKER	INTERNAL MODERATOR	INTERNAL MODERATOR
Chimney, Flue, Parging	Correct position	3			
	Hatching	2			
	Labelling	3			
Rafter, Purlin, Fillet	Correct position	3			
	Hatching	2			
	Labelling	3			
Fibre cement sheeting, Gutter, Apron flashing, 2 x Cover flashing	Correct position	5			
	Labelling	5			
Rafter angle	Correct angle	1			
Angle, 2 x Chimney wall, flue. Overall	Dimension	5			
	Subtotal	**32**			
	Divide by	**3,2**			
Overall correctness		**10**			
	Accuracy	**4**			
	Line work	**3**			
Balanced layout and neatness		**1**			
	TOTAL	**18**			

NOTE: NO marks should be allocated for any part of the drawing in the incorrect position but marks should be allocated for hatching of that component.

Copyright reserved

QUESTION 5: PLUMBING

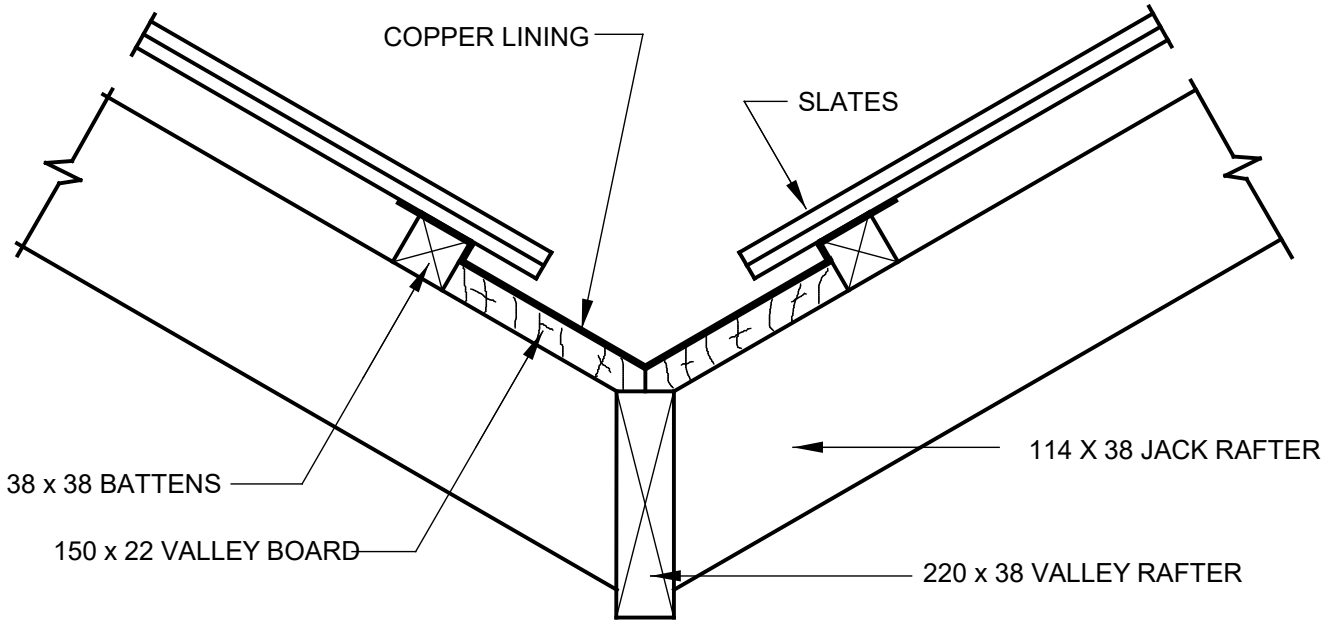

SECTION THROUGH OPEN VALLEY

SCALE 1:5

SEE DRAWING FOR MODEL ANSWER

RUBRIC FOR DRAWING QUESTION 5

PART OF THE DRAWING	MARKING CRITERIA	POSSIBLE MARK	MARKER	INTERNAL MODERATOR	INTERNAL MODERATOR
Jack rafters	Correct position	2			
	Labelling	1			
Valley rafter	Correct position	1			
	Hatching	1			
	Labelling	1			
Battens	Correct position	2			
	Hatching	2			
	Labelling	1			
Slates	Correct position	1			
	Labelling	1			
Valley boards	Correct position	2			
	Hatching	2			
	Labelling	1			
Copper lining	Correct position	1			
	Labelling	1			
	Dimensions	1			
	Subtotal	**21**			
	Divide by	**3**			
Overall correctness		**7**			
	Accuracy	**3**			
	Line work	**2**			
Balanced layout and neatness		**1**			
		13			

NOTE: NO marks should be allocated for any part of the drawing in the incorrect position but marks should be allocated for hatching of that component.

Copyright reserved

QUESTION 6: GENERAL

6.1	F
6.2	J
6.3	A
6.4	B
6.5	H
6.6	D
6.7	I
6.8	G
6.9	E
6.10	C

(10 × 1) **[10]**

TOTAL: 100