higher education & training

Department:
Higher Education and Training
REPUBLIC OF SOUTH AFRICA

MARKING GUIDELINE

NATIONAL CERTIFICATE

BUILDING DRAWING N2

22 NOVEMBER 2023

This marking guideline consists of 11 pages.

Copyright reserved

QUESTION 1

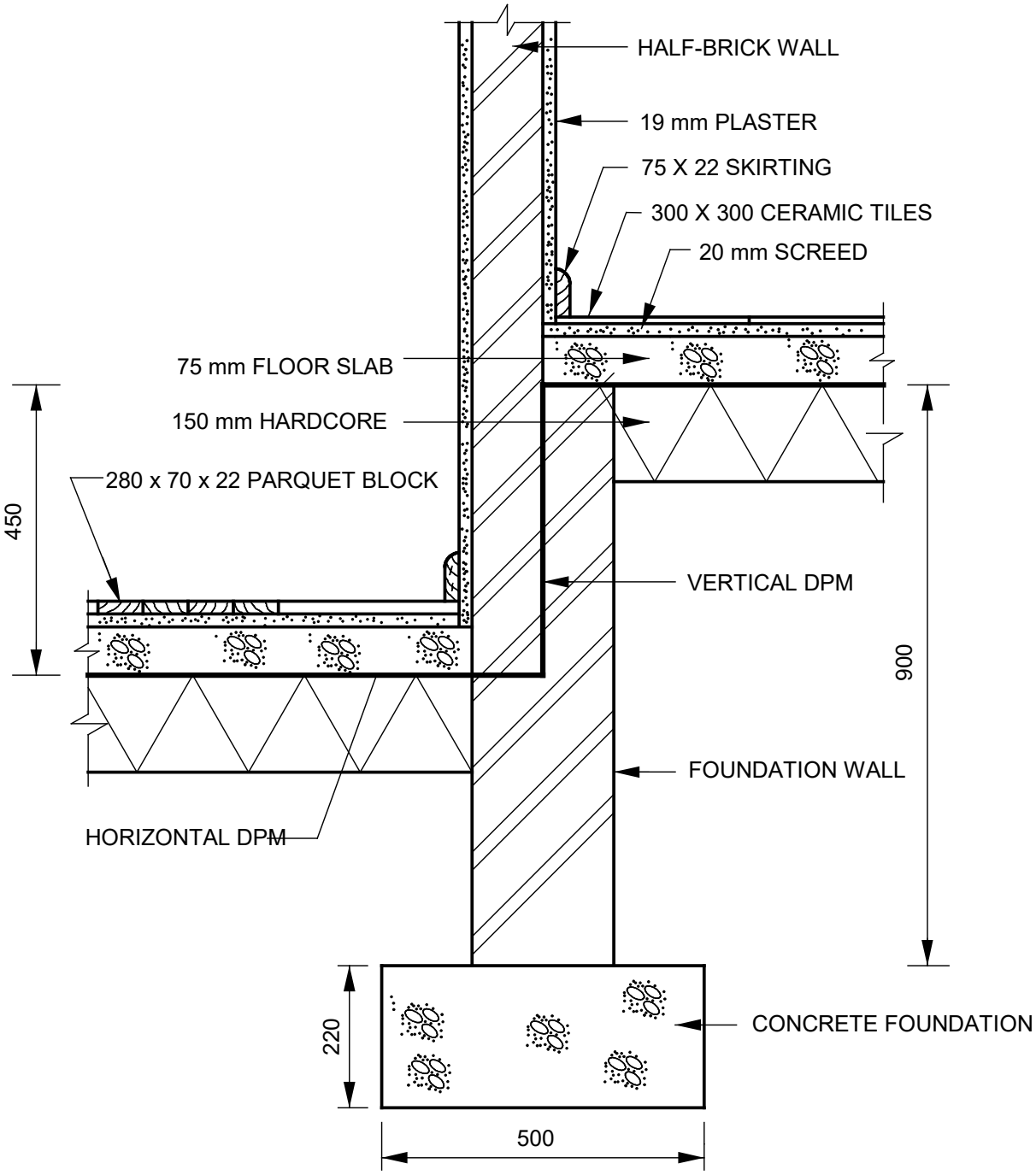

VERTICAL SECTION THROUGH X-X

SCALE 1:10

Copyright reserved

QUESTION 1

SEE DRAWINGS FOR MODEL ANSWER

RUBRIC FOR DRAWING					
Part of the drawing	**Marking Criteria**	**Possible Mark**	**Marker**	**Internal Moderator**	**External Moderator**
Concrete foundation, Foundation wall, internal wall,	Correct position	3			
	Hatching	2			
	Labelling	3			
Hardcore, floor slab and screed	Correct position	6			
	Hatching	3			
	Labelling	3			
Plaster, skirting, ceramic tiles, parquet block	Correct position	6			
	Hatching	3			
	Labelling	4			
Vertical DPM, horizontal DPM	Correct position	3			
	Labelling	2			
	Dimensions	4			
	Subtotal	**42**			
	Divide by	**3**			
Overall correctness		**14**			
	Accuracy	**6**			
	Line work	**4**			
Balance layout and neatness		**2**			
	TOTAL	**26**			

NOTE: NO marks should be allocated for any part of the drawing in the incorrect position but marks may be allocated for hatching of that component.

Copyright reserved

QUESTION 2

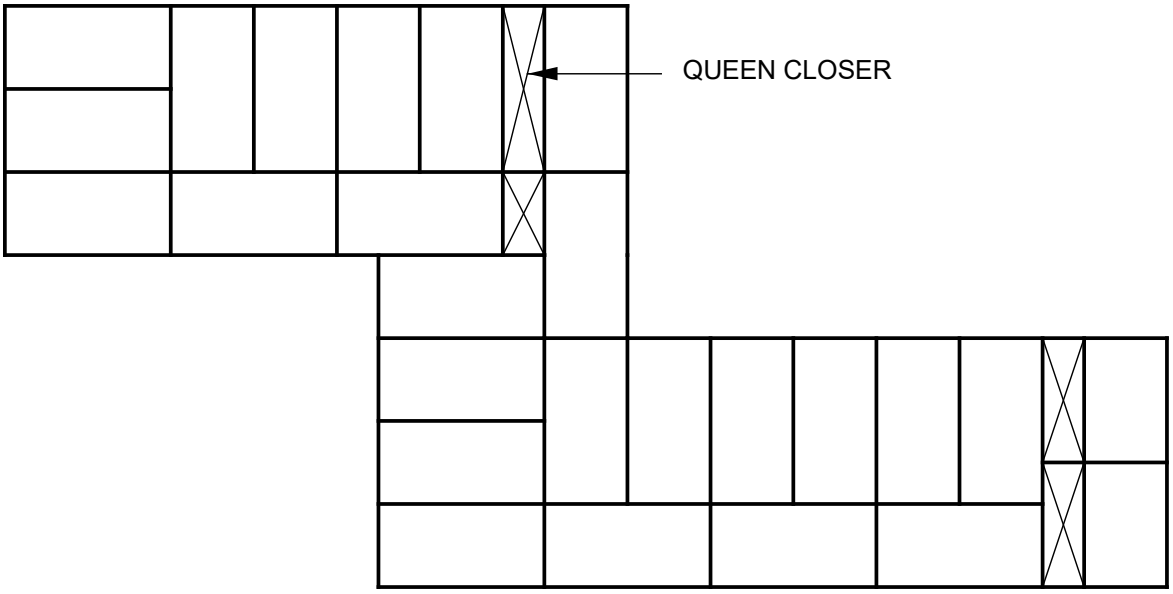

COURSE A

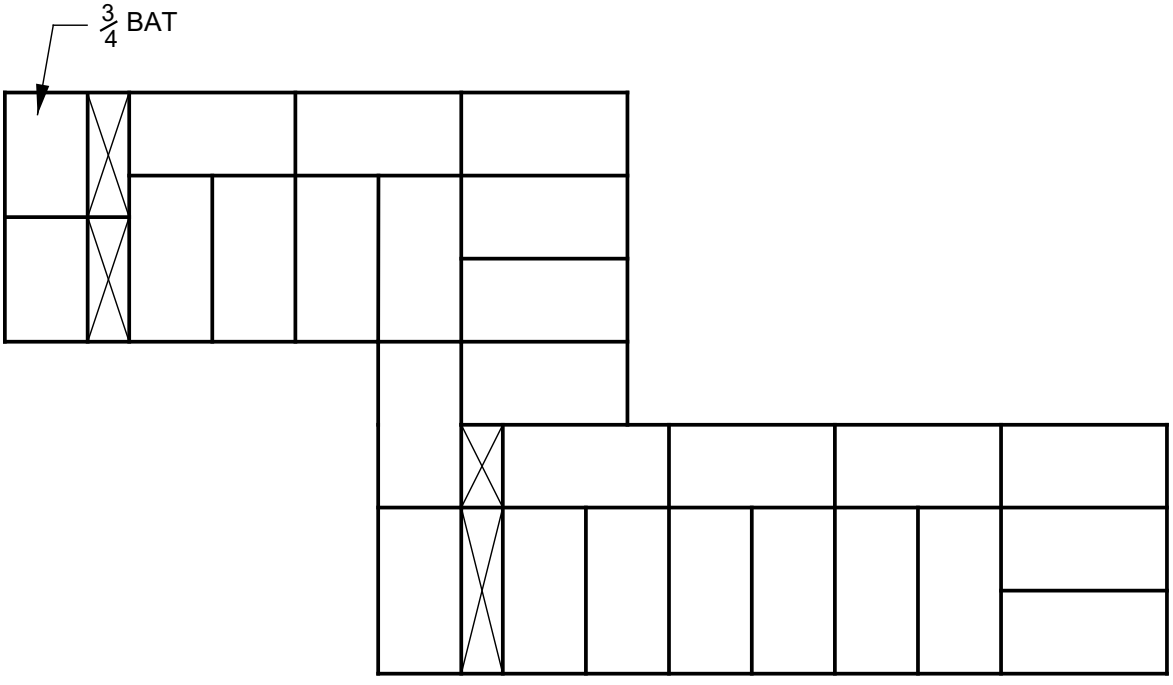

COURSE B

ALTERNATE PLAN COURSE OF ONE-HALF- BRICK WALL
BUILT IN ENGLISH BOND CORNER

SCALE 1:10

Copyright reserved

QUESTION 2

SEE DRAWINGS FOR MODEL ANSWER

RUBRIC FOR DRAWING					
Part of the drawing	**Marking Criteria**	**Possible Mark**	**Marker**	**Internal Moderator**	**External Moderator**
Alternate plan	Courses aligned	3			
Course A	Correct size	3			
	Brick pattern	2			
	Brick size	1			
	Stopped ends	2			
Courses B	Correct size	3			
	Brick pattern	2			
	Brick size	1			
	Stopped ends	2			
Other	Labelling, title, scale	5			
	Subtotal	**24**			
	Divide by	**3**			
Overall correctness		**8**			
	Accuracy	**4**			
	Line work	**3**			
Balance layout and neatness		**2**			
	TOTAL	**17**			

NOTE: NO marks should be allocated for any part of the drawing in the incorrect position but marks may be allocated for hatching of that component.

Copyright reserved

QUESTION 3

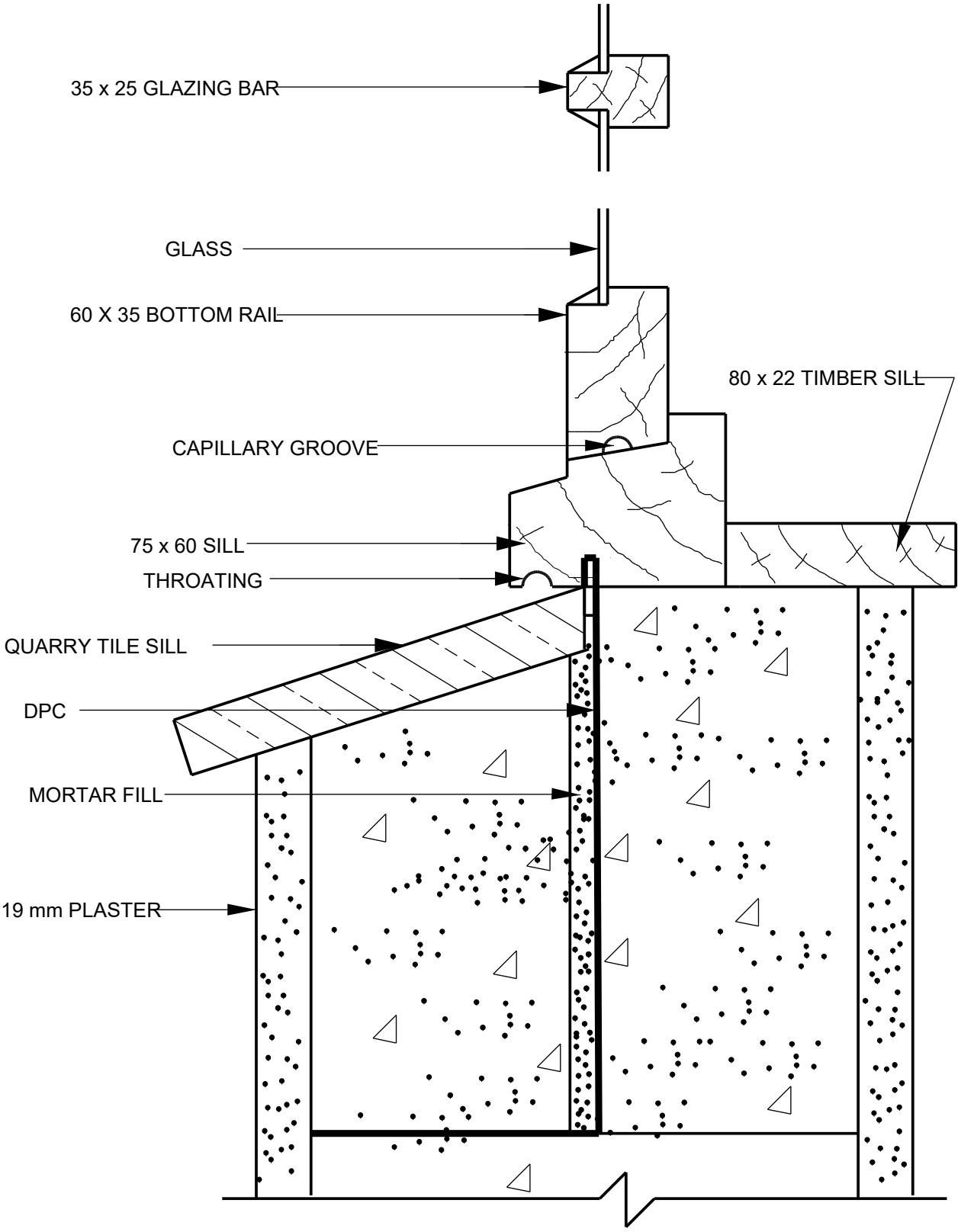

VERTICAL SECTION THROUGH GLAZING BAR, WINDOW SILL AND WALL.

SCALE 1:2

Copyright reserved

QUESTION 3

SEE DRAWINGS FOR MODEL ANSWER

RUBRIC FOR DRAWING					
Part of the drawing	**Marking Criteria**	**Possible Mark**	**Marker**	**Internal Moderator**	**External Moderator**
Wall, plaster, quarry tile sill	Correct position	4			
	Hatching	4			
	Labelling	3			
Windowsill, bottom rail, glazing bar, glass	Correct position	4			
	Hatching	3			
	Labelling	4			
DPC, capillary groove, throating	Correct position	3			
	Labelling	3			
Other	Title, scale	2			
	Subtotal	**30**			
	Divide by	**3**			
Overall correctness		**10**			
	Accuracy	**4**			
	Line work	**3**			
Balance layout and neatness		**1**			
	TOTAL	**18**			

NOTE: NO marks should be allocated for any part of the drawing in the incorrect position but marks may be allocated for hatching of that component.

Copyright reserved

QUESTION 4

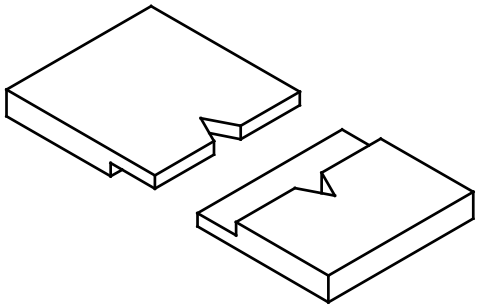

REBATED JOINT WITH JOGGLE

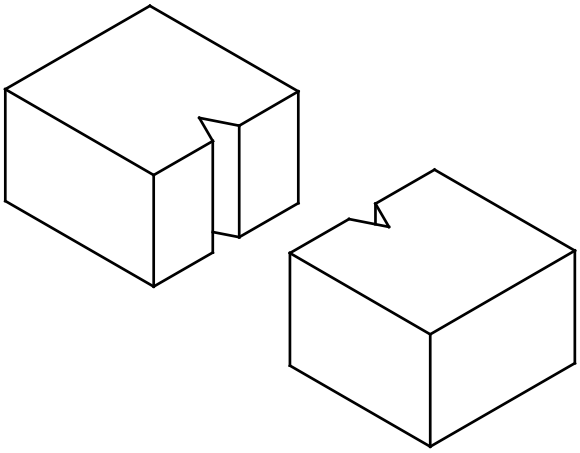

V - JOGGLE

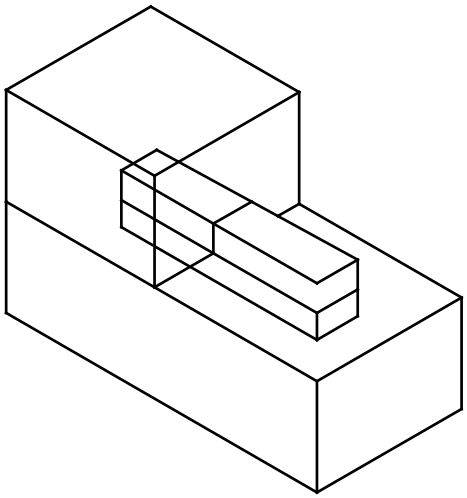

TABLING JOINT WITH SLATE JOGGLE

QUESTION 5

SEE DRAWINGS FOR MODEL ANSWER

RUBRIC FOR DRAWING					
Part of the drawing	**Marking Criteria**	**Possible Mark**	**Marker**	**Internal Moderator**	**External Moderator**
Rebated joint with joggle	Drawing Isometric	1			
	Drawing correct	2			
	Line work	1			
	Title correct	1			
V-joggle	Drawing Isometric	1			
	Drawing correct	2			
	Line work	1			
	Title correct	1			
Tabling joint with slate joggle	Drawing Isometric	1			
	Drawing correct	2			
	Line work	1			
	Title correct	1			
	TOTAL	**15**			

NOTE: NO marks should be allocated for any drawing that is incorrect. If drawing is NOT isometric but correct, 1 mark must be given for drawing correct, line work and title.

Copyright reserved

QUESTION 5

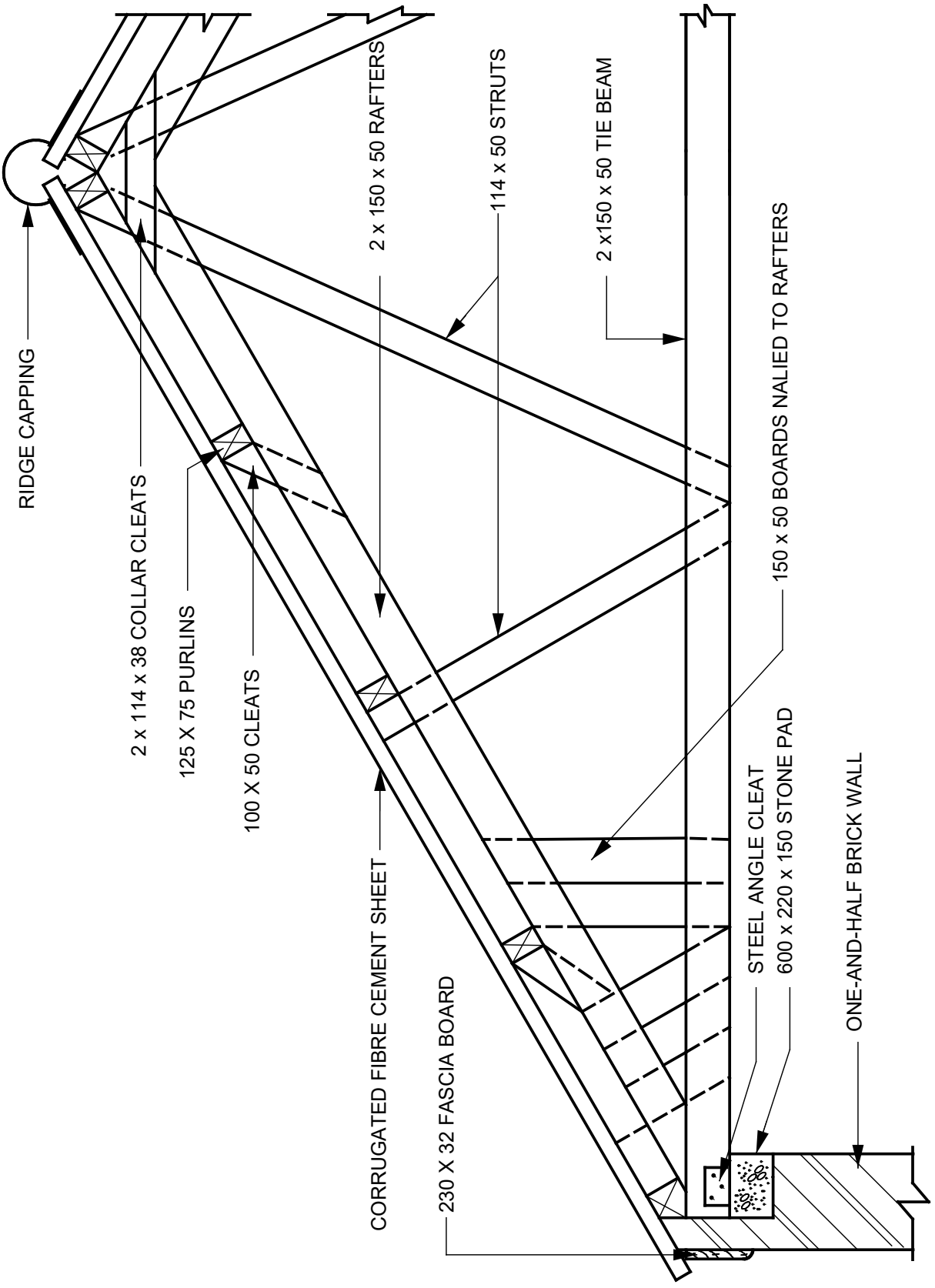

VERTICAL SECTION THROUGH EAVE AND RIDGE OF A LAMINATED ROOF TRUSS

SCALE 1:20

QUESTION 5

SEE DRAWINGS FOR MODEL ANSWER

RUBRIC FOR DRAWING					
Part of the drawing	**Marking Criteria**	**Possible Mark**	**Marker**	**Internal Moderator**	**External Moderator**
Wall, stone pad, steel angle cleat	Correct position	3			
	Hatching	2			
	Labelling	3			
Rafter, tie beam, struts, cleats, boards, collar	Correct position	6			
	Labelling	6			
Purlins, roof covering, ridge cap, fascia	Correct position	4			
	Hatching	2			
	Labelling	4			
	Subtotal	**30**			
	Divide by	**2**			
Overall correctness		**15**			
	Accuracy	**5**			
	Line work	**3**			
Balance layout and neatness		**1**			
	TOTAL	**24**			

NOTE: NO marks should be allocated for any part of the drawing in the incorrect position but marks may be allocated for hatching of that component.

TOTAL: 100

Copyright reserved