higher education & training

Department:
Higher Education and Training
REPUBLIC OF SOUTH AFRICA

MARKING GUIDELINE

NATIONAL CERTIFICATE

BRICKLAYING AND PLASTERING THEORY N2

1 December 2023

This marking guideline consists of 6 pages.

Copyright reserved

QUESTION 1

1.1 Resource-oriented scheduling focuses on when resources such as labour and building material must be available on site.✓ It is a process used by teams to organise and structure their employees,✓ so that the tasks they need to complete are scheduled based on availability and capability.✓ (Any 2 × 1) (2)

1.2
- The work breakdown structure (WBS)
- The critical path method (CPM)
- The Gantt chart. (Any 3 × 1) (3)

1.3
- The start date of the project.
- Who is responsible for each task.
- How long each task will take.
- The finish date of the project.
- What the project's tasks and milestones are.
- When tasks start and finish.
- Which tasks overlap or depend on each other. (Any 4 × 1) (4)

1.4
- High structural capacity
- Good thermal insulation
- Resistance to fire
- Sound absorption
- Resistance to water (Any 4 × 1) (4)

1.5
- Hand-moulding
- Mechanised moulding (2)

[15]

QUESTION 2

2.1
2.1.1 Displacement
2.1.2 Toppling over
2.1.3 Evenly
2.1.4 Uniformly
2.1.5 Two
(5 × 1) (5)

2.2
2.2.1 U-shaped metal spikes or nails used as fasteners.

2.2.2 A piece of wood or metal with one thick end that tapers to a thin edge, it is driven between two objects to secure or separate them.

2.2.3 A piece of timber that passes through a wall plate and into a wall.

2.2.4 Toothing is done when provision must be made for a completed wall to be extended at a later stage.

2.2.5 Racking back is done when a straight piece of wall is built halfway from its end, so that the remaining piece can join into the existing wall and the bond will be maintained.

(5 × 2) (10)

2.3 2.3.1 Butterfly tie
2.3.2 Plastic wall tie
2.3.3 Twist tie
2.3.4 Twisted-pair wall tie

(4 × 1) (4)

2.4
- Overreaching
- Placing ladder on other items to gain additional height
- Being too hasty when climbing or descending
- Climbing one-handed while carrying tools or materials in the other hand
- Standing at the very top of a short ladder or stepladder rather than getting one long enough for the job
- Hanging tools from ladder rungs or leaving tools on top of the ladder
- Placing the ladder at an incorrect angle
- Using worn or damaged ladders
- Failing to secure the ladder in place
- Placing a ladder in front of a door that opens towards the ladder
- Using a wet ladder (Any 4 × 1) (4)

[23]

QUESTION 3

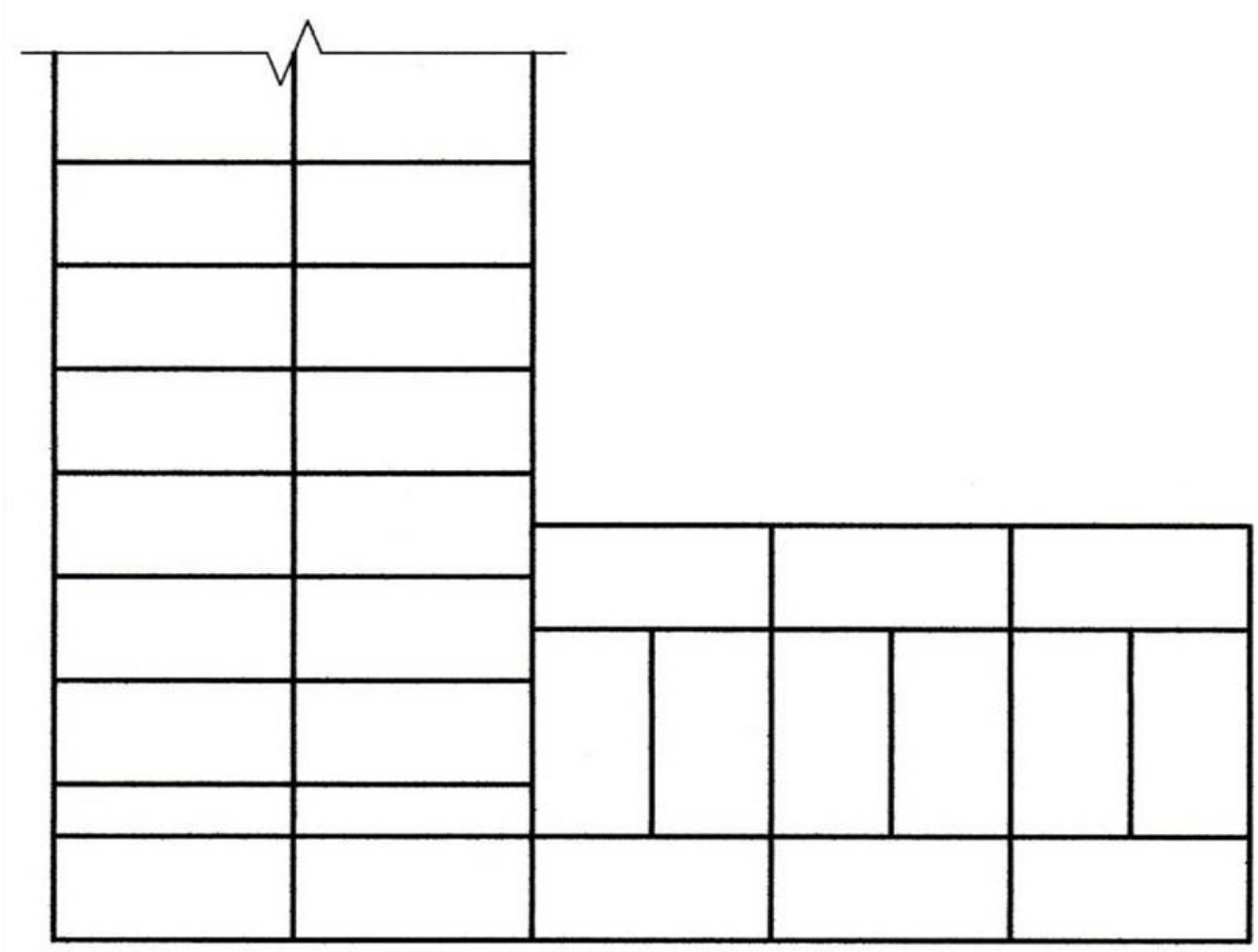

COURSE 2

Alternate plan course of a two-brick corner in English bond with stopped end at one-wall end.

MARK ALLOCATION		
Approximate scale	=	1 mark
Correct bond to main wall	=	2 marks
Correct bond to two-brick adjoining wall	=	2 marks
Correct bonding at corner	=	2 marks
Correct stopped end	=	1 mark
Neatness and line work	=	1 mark
Title and scale	=	1 mark
TOTAL	=	**10 marks**

[10]

QUESTION 4

4.1
- Hard wearing
- Easy to clean and maintain
- Has attractive appearance
- Hygienic
- Cost effective (5)

4.2 600 mm (1)

4.3
- Rough arch
- Axed arch
- Gauged arch (3 × 2) (6)

4.4
- Chalk line
- Caulking gun
- Combination square
- Grout spreader
- Rubber mallet
- Spirit level
- Straight edge
- Tape measure
- Tile cutter
- Tile nipper (Any 6 × 1) (6)

4.5

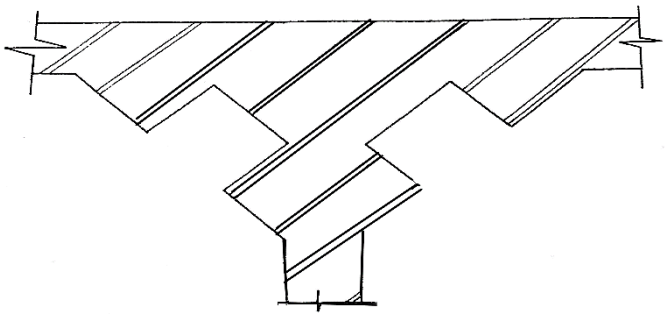

ANGLE FIRE PLACE

Mark allocation		
Correct drawing	=	3
Title	=	1
TOTAL		**4**

(4)
[22]

QUESTION 5

5.1
5.1.1 D
5.1.2 F
5.1.3 B
5.1.4 E
5.1.5 C

(5 × 1) (5)

5.2 Is a plaster base.✓ Protects the finished surface from cracks✓ and improves mechanical strength of the plaster walls.✓ (Any 2 × 1) (2)

5.3
- Corner bead
- Expansion joint/Movement joint
- Strip lathing
- Casing bead
- Foundation weep screed (Any 3 × 1) (3)

5.4
- Plate
- Stock
- Shoe
- Cleat
- Slipper
- Stay
- Muffle plate (Any 5 × 1) (5)

5.5
- They require little maintenance.
- They are resistant to freezing temperature.
- They are waterproof.
- They insulate the building from heat.
- They provide a degree of insulation against sound.
- They are strong. (6)

[21]

QUESTION 6

6.1
6.1.1 False
6.1.2 False
6.1.3 True
6.1.4 True
6.1.5 False

(6 × 1) (6)

6.2
- Horizontal steel rods in bonding beams
- Vertical reinforcement bars in hollow concrete blocks
- Brick force horizontally with solid concrete blocks (Any 2 × 1) (2)

6.3 The purpose of waterproofing is to prevent water, especially groundwater, from being drawn through the wall. (2)

[9]

TOTAL: 100

Copyright reserved