higher education & training

Department:
Higher Education and Training
REPUBLIC OF SOUTH AFRICA

MARKING GUIDELINE

NATIONAL CERTIFICATE

ARMATURE WINDING THEORY N2

24 November 2022

This marking guideline consists of 7 pages.

Copyright reserved

QUESTION 1

1.1
- Lap windings
- Wave windings (2)

1.2
- Commutation is the reversal of current in the armature coils
- while being short-circuited by the brushes during rotation. (2)

1.3
- The purpose of mica is to insulate
- and separate the commutator segments. (2)

1.4
- If the index finger points in the direction of the magnetic field
- and the thumb points in the direction of motion
- then the middle finger will point in the direction of the induced EMF. (3)

1.5 There are usually 2 paths✓ depending on the poles of the machine. (1)

1.6 1.6.1 Coil span = no of slots/no of poles
= 112/6
= 18,667✓
The coil span 1-19✓✓ (3)

1.6.2 Commutator pitch = $\frac{\text{No of segments } \pm 1}{\text{Pole pairs}}$
= [360 +1]/3 or [360 -1]/3✓
= 120 or 119✓✓ (3)

1.7 1.7.1 $E = V - IR$
= 110 – (65 × 0, 62)✓
= 69,7 volts✓ (2)

1.7.2 $E = V + IR$
= 110 + (0,62 × 75)✓
= 156,5 volts✓ (2)
[20]

QUESTION 2

2.1
- In the cumulatively compounded windings the ampere turns have the same polarity.
- In the differentially compounded windings the ampere turns oppose one another. (2 × 1) (2)

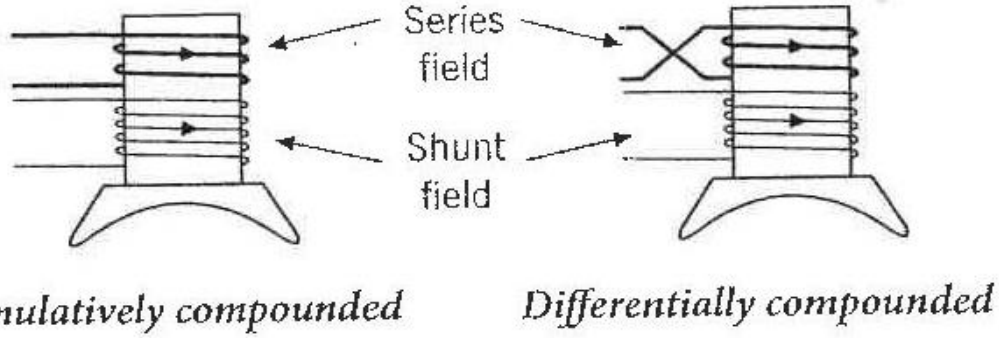

Diagram	2
Series field	1
Shunt field	1
Differentially compounded	1
Cumulatively compounded	1

(2 × 3) (6)

2.2 2.2.1

$$Z = \frac{E \times 60 \times C}{2 \times P \times N \times \emptyset}$$

$$Z = \frac{380 \times 60 \times 6}{2 \times 3 \times 0{,}0414 \times 800} \checkmark$$

$$Z = 688{,}406\ conductors \checkmark$$

$$Conductor\ per\ slot = \frac{688{,}406}{110} = 6{,}258 \checkmark$$

$= 7$ conductors/slot✓ (4)

2.2.2

$$T = \frac{0{,}318 I_a Z P \emptyset}{C}$$

$$T = \frac{0{,}318 \times 110 \times 689 \times 3 \times 0{,}0414}{6} \checkmark$$

$$T = 498{,}895\ N.m \checkmark\checkmark$$ (3)

2.3
- With multipolar lap-wound generators, the load is not shared evenly
- unless the EMFs are equal.
- To avoid this, equalizing windings are used, joining various parts of the windings
- which should be at the same potential. (4)

2.4
- Carbon graphite
- Electrographite
- Metal graphite

(Any 1 × 1) (1)
[20]

QUESTION 3

3.1
- If the shaft is magnetised axially
- each bearing becomes a homopolar short- circuited generator.
- The resulting currents destroy the bearing surfaces. (3)

3.2
- A short-circuit of a coil and coils
- An open-circuit in one of the coils
- An earth on one or more coils (3)

3.3

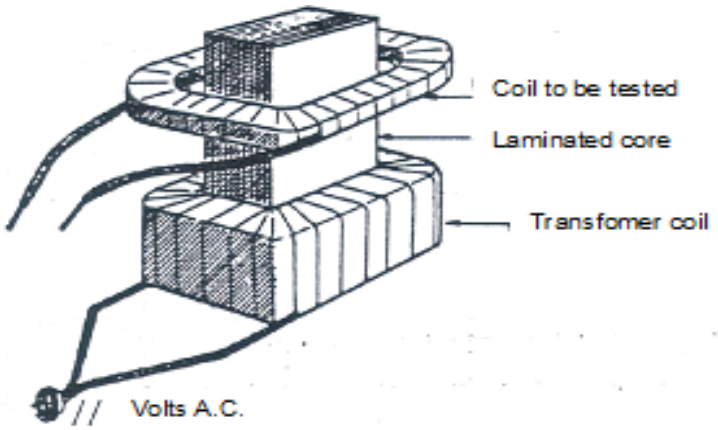

Correctness of diagram	2
Correct labels	2

(4)

3.4

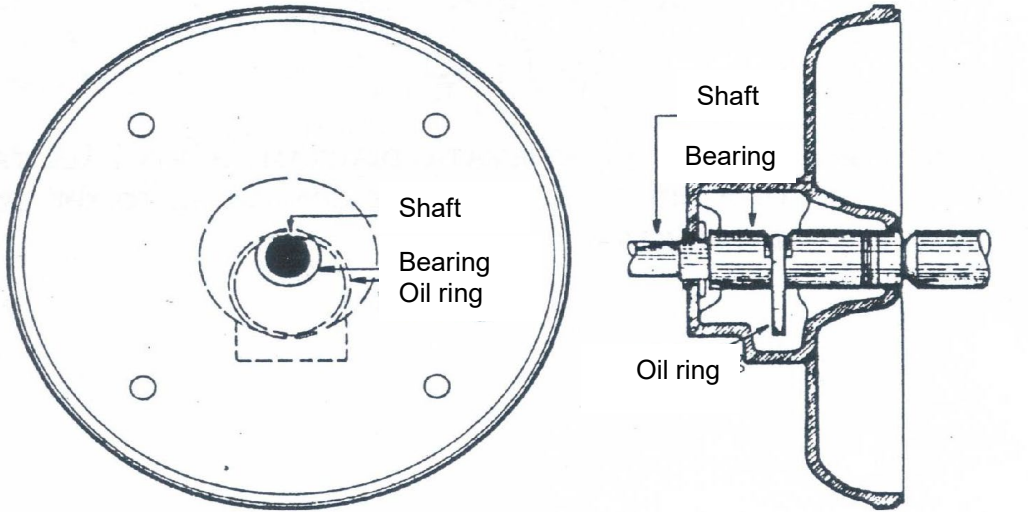

(Any one of the TWO diagrams is acceptable.)

Correctness of diagram	2
Correct labels	2

(4)

3.5
- Loose connections on the fields or armature circuit
- A dirty or clogged commutator
- Wrong brushes or wrong brush grade (3)

3.6
- Slot linings cut and tucked over the coil
- Slot left open, but covered with a strip of insulator
- Slot closed with hammered-in wedge and insulation cut flash (3)

[20]

QUESTION 4

4.1 4.1.1

$$X_L = 2\pi f L$$
$$L = \frac{X_L}{2\pi f} = \frac{64}{2\pi \times 50} \checkmark = 203{,}718\ mH \checkmark$$ (2)

4.1.2

$$X_C = \frac{1}{2\pi f C}$$
$$C = \frac{1}{2\pi \times 50 \times 94} \checkmark = 33{,}863\ \mu F \checkmark$$ (2)

4.1.3

$$Z = \sqrt{R^2 + (X_c - X_L)^2} = \sqrt{28^2 + (94-64)^2} \checkmark$$
$$= \sqrt{1\,684} \checkmark$$

= 41,037 Ω✓ (3)

4.1.4

$$I_T = \frac{V_s}{Z} = \frac{220V}{41{,}037\Omega} \checkmark$$

= 5,361 A✓ (2)

4.1.5

$$V_R = I \times R = 5{,}361 \times 28 = 150{,}108\ \text{V}$$
$$V_L = I \times X_L = 5{,}361 \times 64 = 343{,}104\ V$$
$$V_C = I \times X_C = 5{,}361 \times 94 = 503{,}934\ V$$ (3)

4.1.6

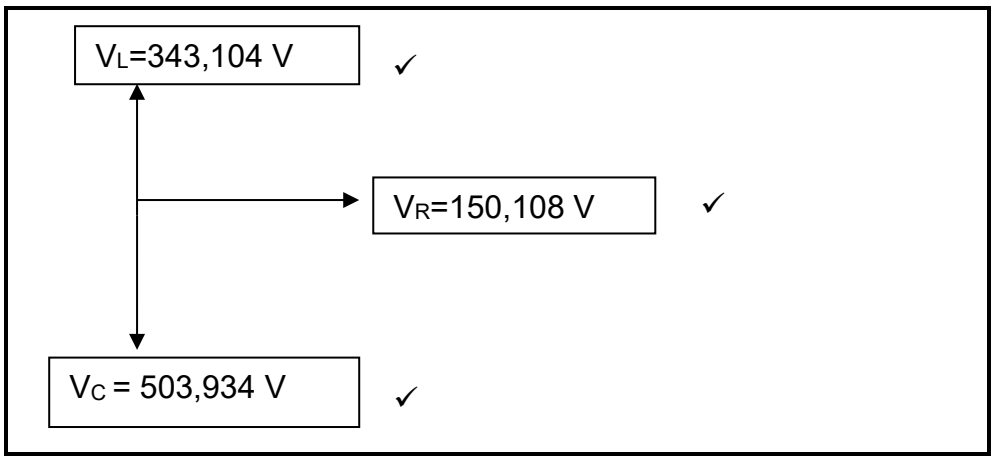

✓ ✓ ✓ (3)

4.2

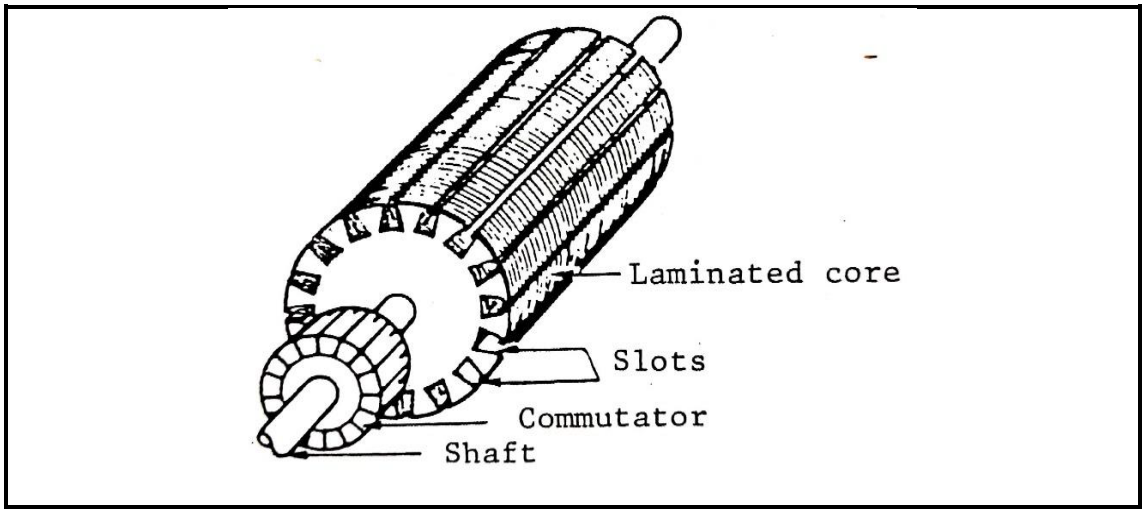

(3 marks for a relevant diagram) (1 mark each for 2 correct labels) (5)
[20]

QUESTION 5

5.1
- Copper losses
- Eddy-current losses
- Hysteresis losses (3)

5.2
- Oil
- Water
- Air cooling (3)

5.3
- Brush shifting
- Increasing the field flux
- Interpoles
- Compensating windings (4)

5.4 5.4.1 $N1 = \frac{N2 \times V1}{V2}$

$= \frac{125 \times 1\,000}{400}$ ✓

$= 312{,}5$ turns ✓

5.4.2 $S = VI$

$I = S/V$

$= 150\,000/400$ ✓

$= 375$ amps ✓

5.4.3 $S = VI$

$I = S/V$

$= 150\ 000/1\ 000$✓

$= 150$ amps✓

5.4.4 $P = S \times \cos\theta$

$= 150\ 000 \times 0{,}866$✓

$= 129{,}9$ kW✓

5.4.5 $V1/V2 = 1\ 000/400$✓ $= 2{,}5 : 1$✓

(5 × 2) (10)
[20]

TOTAL: 100

Copyright reserved