higher education & training

Department:
Higher Education and Training
REPUBLIC OF SOUTH AFRICA

MARKING GUIDELINE

NATIONAL CERTIFICATE

RADIO THEORY N1

23 November 2022

This marking guideline consists of 6 pages.

Copyright reserved

QUESTION 1

1.1 F
1.2 J
1.3 A
1.4 H
1.5 G
1.6 B
1.7 C
1.8 D
1.9 E
1.10 I

(10 × 1) **[10]**

QUESTION 2

2.1
- Type of material
- Length of material
- Cross-sectional area
- Temperature of material (4)

2.2

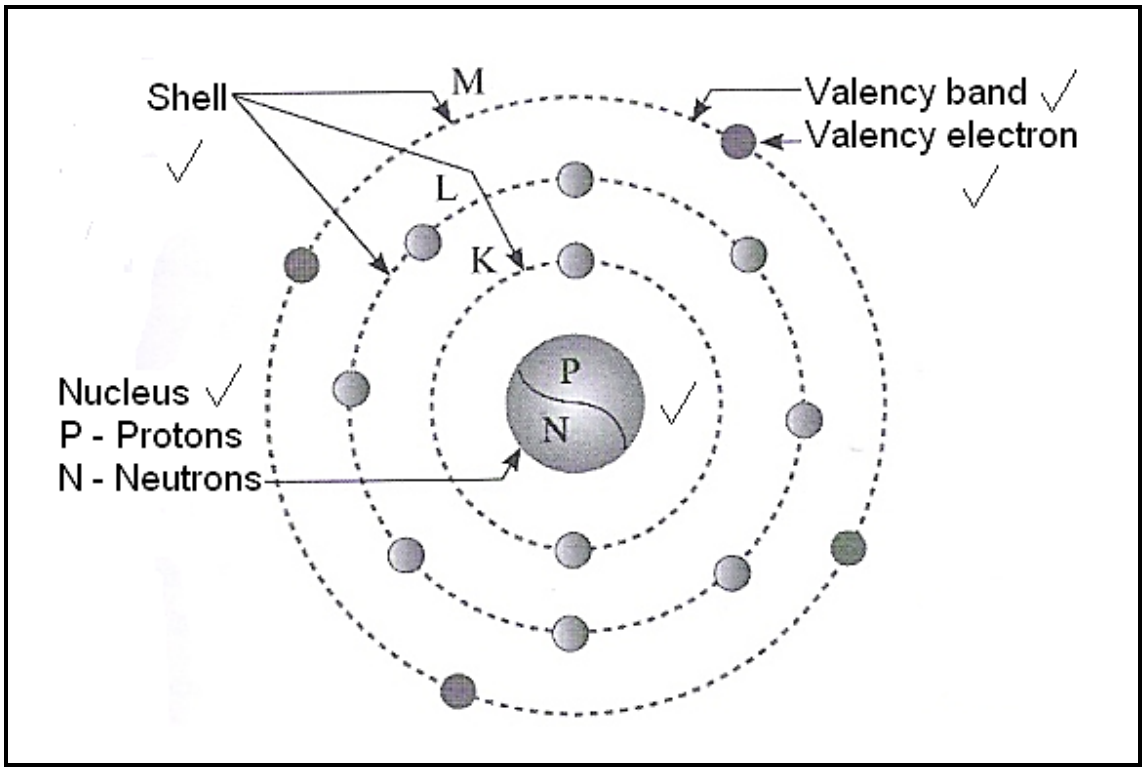

(One mark for correct number of electrons) (6)
[10]

QUESTION 3

3.1

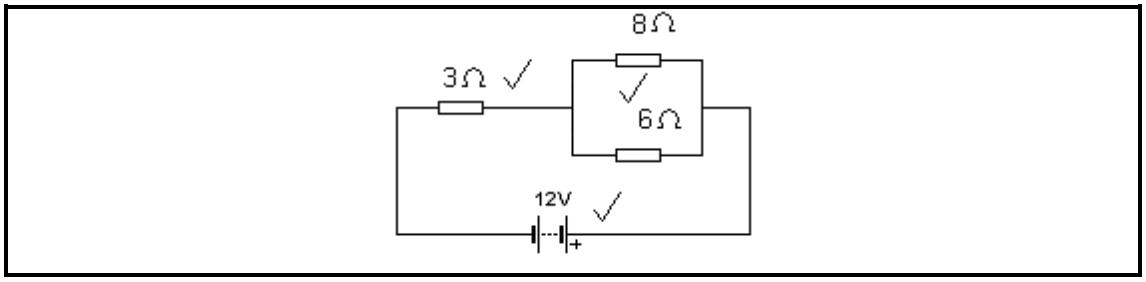

(3)

3.2

$$\frac{1}{Rp} = \frac{1}{R_1} + \frac{1}{R_2}$$

$$\frac{1}{Rp} = \frac{1}{8} + \frac{1}{6} = 0{,}292\checkmark$$

$$R_p = 3{,}429\ \Omega\checkmark$$

$$R_T = 3 + 3{,}429$$

$$= 6{,}429\ \Omega\checkmark$$

(3)

3.3

$$I = \frac{V}{R}$$

$$I = \frac{12}{6{,}429}$$

$$= 1{,}867\ A\checkmark\checkmark$$

(2)

3.4 $V = I \times R = 3 \times 1{,}867\ \checkmark = 5{,}6\ V\checkmark$ (2)

[10]

QUESTION 4

4.1 Inductance is the ability of a conductor✓ to produce an induced voltage✓ when the current varies.✓ (3)

4.2

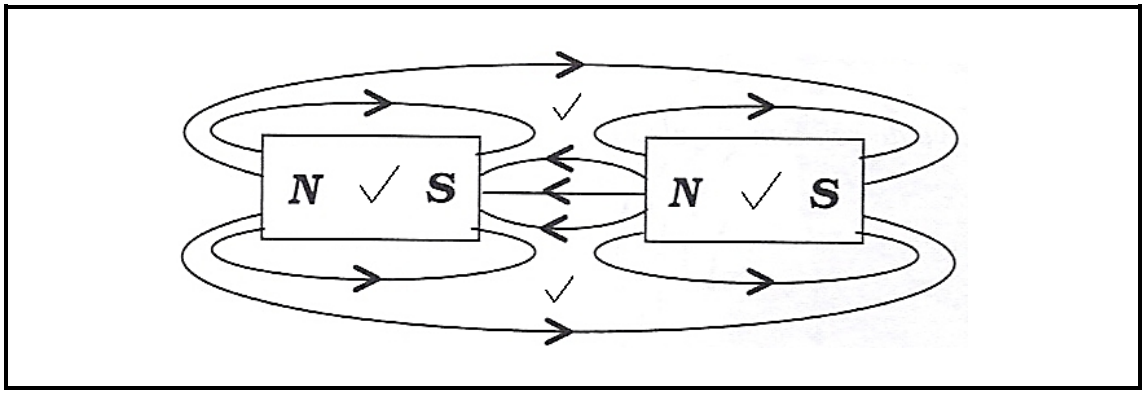

(4)

4.3
- The forefinger represents the direction of the magnetic field.
- The thumb represents the direction of motion of the conductor.
- The middle finger shows the direction of the current. (3)

[10]

QUESTION 5

5.1 $$R_S = \frac{V}{I_m} - R_m \checkmark$$

$$= \frac{100}{120x10^{-3}} - 150 \checkmark$$

$$= 683{,}33\ \Omega \checkmark$$ (3)

52

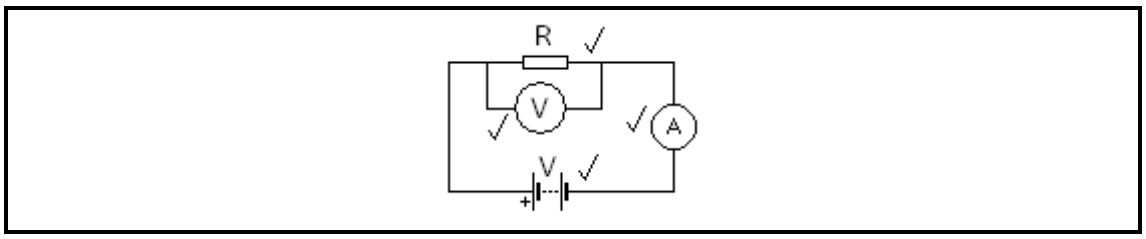

(4)

5.3 The current induced in a circuit✓ due to a magnetic field✓ is so directed as to oppose the change in flux.✓ (3)

[10]

QUESTION 6

6.1

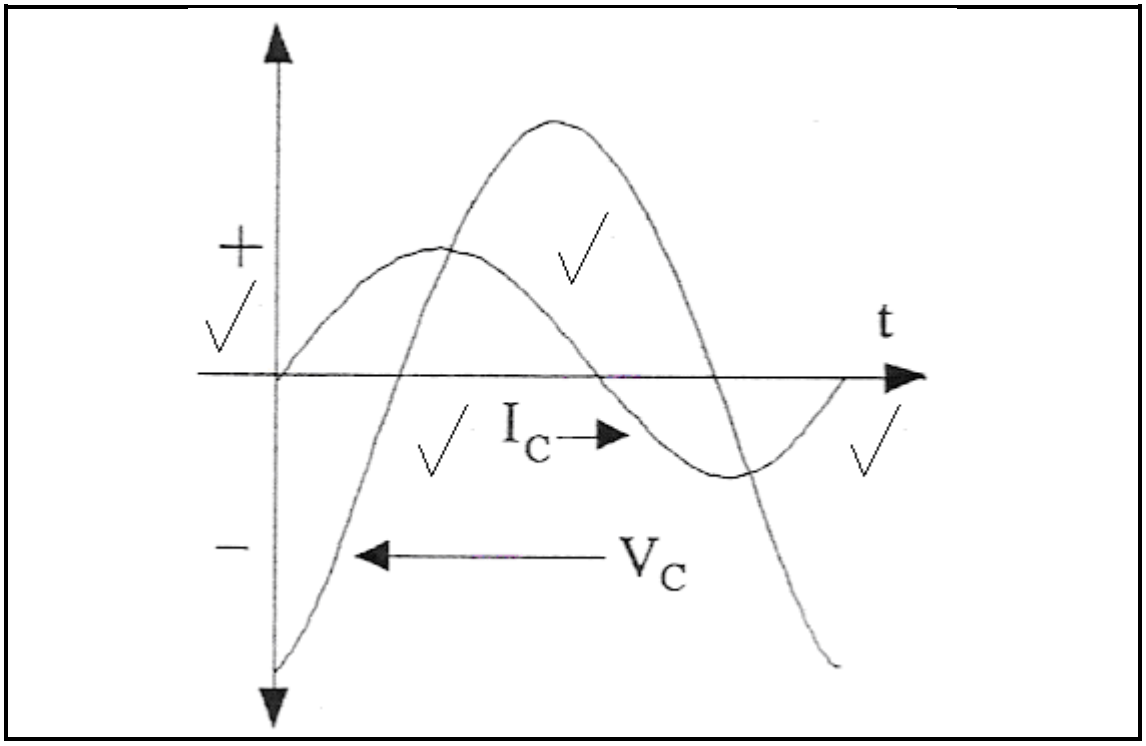

(4)

6.2 As the coil is rotated through 360°✓ in a magnetic field,✓ electricity✓ is generated in the coil✓ in the shape of a sine wave.✓ (5)

6.3 Hertz (1)

[10]

QUESTION 7

7.1

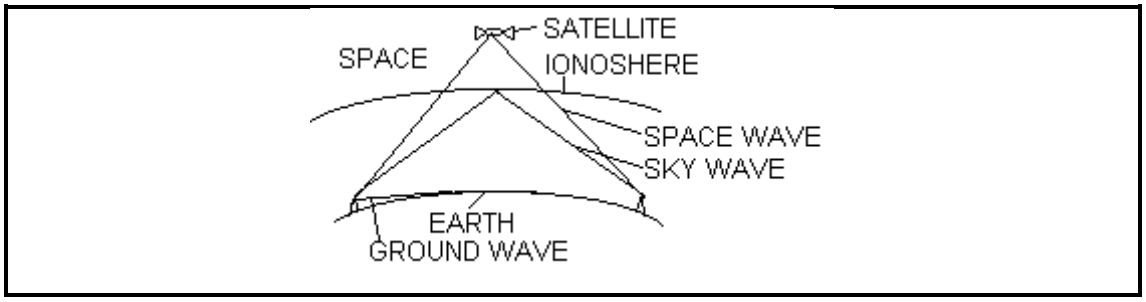

(6)

7.2 When current flows through the coil of the speaker,✓ a magnetic field is induced.✓ This magnetic field opposes or attracts the permanent magnet fields✓ causing the diaphragm of the speaker to move.✓ (4)

[10]

QUESTION 8

8.1

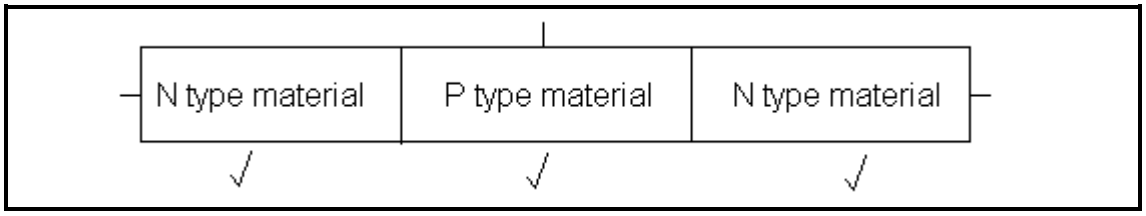

(3)

8.2 Movement of electrons✓ from the negative✓ to the positive terminal of battery✓ (3)

8.3 Silicon✓ and germanium✓ (2)

8.4 Anode✓ and cathode✓ (2)

[10]

QUESTION 9

9.1 9.1.1 

9.1.2 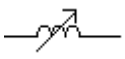

9.1.3 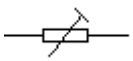

(3 × 1) (3)

9.2 2✓ 7✓ 3✓ 5%✓ (4)

9.3
- Area of the plates
- Distance between the plates
- Dielectric

(3)

[10]

QUESTION 10

10.1

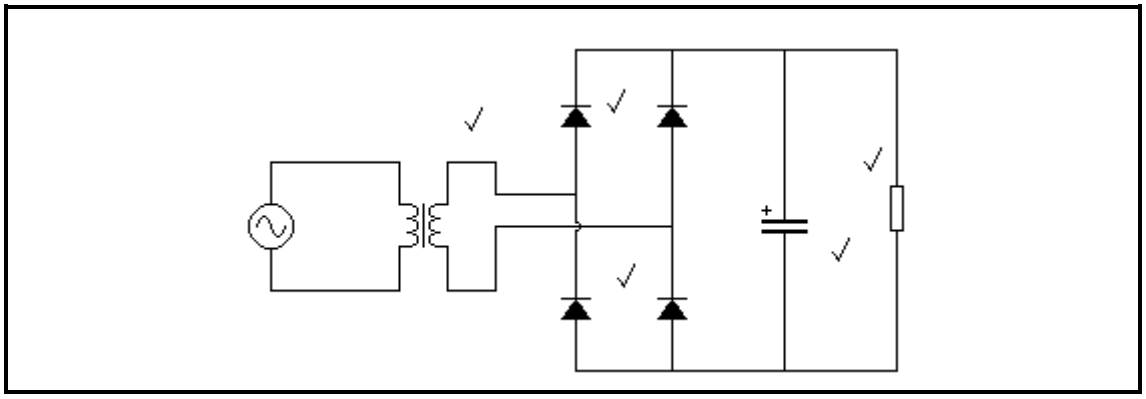

(5)

10.2

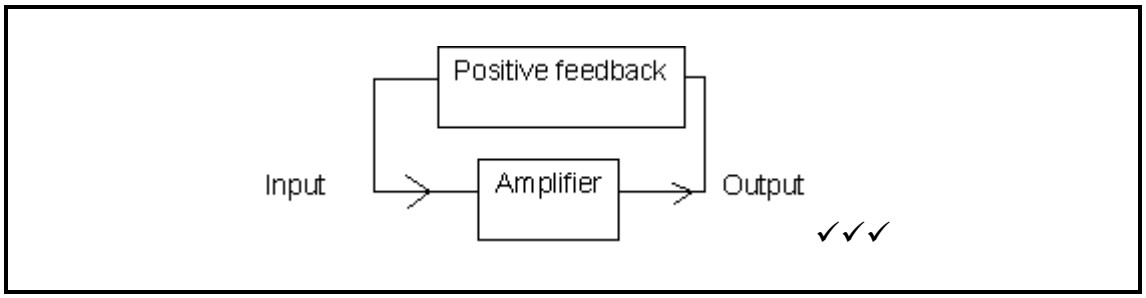

Part of the output signal✓ is fed in phase back to the input.✓ (5)

[10]

TOTAL: 100

Copyright reserved