higher education & training

Department:
Higher Education and Training
REPUBLIC OF SOUTH AFRICA

NATIONAL CERTIFICATE

RADIO AND TELEVISION THEORY N1

(11040821)

29 November 2023 (X-paper)
09:00–12:00

Scientific calculators and drawing instruments may be used.

This question paper consists of 5 pages and 1 formula sheet.

159Q1E2329

Copyright reserved

DEPARTMENT OF HIGHER EDUCATION AND TRAINING
REPUBLIC OF SOUTH AFRICA

NATIONAL CERTIFICATE
RADIO AND TELEVISION THEORY N1
TIME: 3 HOURS
MARKS: 100

INSTRUCTIONS AND INFORMATION

1. Answer all the questions.
2. Read all the questions carefully.
3. Subsections of questions may NOT be separated.
4. Number the answers according to the numbering system used in this question paper.
5. Sketches must be neat and fully labelled.
6. Write neatly and legibly.

Copyright reserved

QUESTION 1

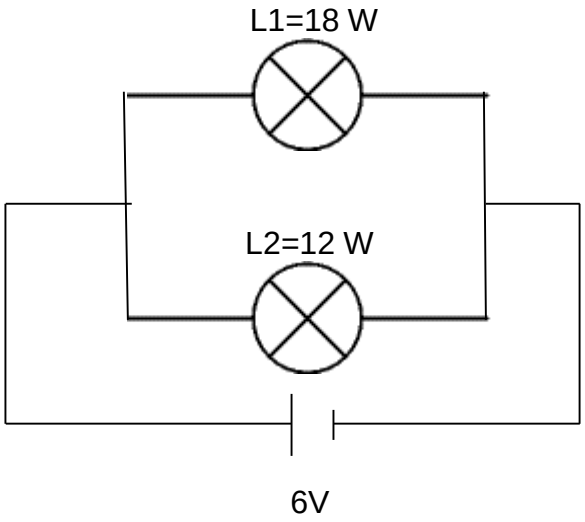

FIGURE 1

Refer to FIGURE 1 above and calculate the following:

1.1 The current of L1

1.2 The current of L2

1.3 The total current of the circuit

1.4 The resistance of lamp L1

1.5 The resistance of lamp L2

(5 × 2) **[10]**

QUESTION 2

Define the following terms:

2.1 Cycle (2)

2.2 Period (2)

2.3 Bandwidth (2)

2.4 Frequency (2)

2.5 Wavelength (3)

[11]

Copyright reserved

QUESTION 3

3.1 State THREE factors that influence the capacity of a capacitor.

3.2 State THREE factors that influence the resistance of a conductor.

(2 × 3) **[6]**

QUESTION 4

Choose an item from COLUMN B that matches a description in COLUMN A. Write only the letter (A–K) next to the question number (4.1–4.10) in the ANSWER BOOK.

COLUMN A		COLUMN B	
4.1	Tuner	A	15625
4.2	Video amp	B	50 Hz
4.3	Vertical hold	C	frame
4.4	LOPT	D	green, yellow and red
4.5	Interlaced	E	deformation
4.6	Pincushion	F	scanning
4.7	Phosphor dots	G	EHT
4.8	Picture	H	deflection
4.9	Field oscillator	I	luminance amp
4.10	Horizontal oscillator	J	front end
		K	shadow mask

(10 × 1) **[10]**

QUESTION 5

Make a neat, labelled sketch which shows an AM modulation transmission process. **[7]**

QUESTION 6

State FIVE basic elements of a black and white television. **[5]**

QUESTION 7

Draw a neat, labelled block diagram of the basic AGC of a black and white television. **[10]**

Copyright reserved

QUESTION 8

Define the following television-receiver stages:

8.1 AGC

8.2 Video amp

8.3 Tuner

8.4 Sync separator

8.5 The line oscillator

(5 × 2) **[10]**

QUESTION 9

Write the following abbreviations in full.

9.1 IF

9.2 DC

9.3 AF

9.4 RF

9.5 RMS

(5 × 1) **[5]**

QUESTION 10

Make a neat, labelled sketch of the CRT of an oscilloscope. **[12]**

QUESTION 11

List EIGHT controls on an oscilloscope. **[8]**

QUESTION 12

Make a neat, labelled sketch showing a graphical production of a sine wave by rotating coil in a magnetic field. **[6]**

TOTAL: 100

Copyright reserved

(11040821)

RADIO AND TELEVISION THEORY N1

FORMULA SHEET

$V = 3 \times 10^8 m/s$

$m\% = \frac{A-B}{A+B} \times \frac{100}{1}$

$R_T = R_1 + R_2 + \cdots R_N$

$e = E_M sin2\pi ft$

$P = V \times I$

$emf = {}^{b}/_{v}$

$V = \frac{P}{I}$

$I = \sqrt{\frac{P}{R}}$

$F = \frac{1}{T}$

$c = r \times t$

$I = \frac{E}{R+r}$

$\lambda = \frac{V}{f}$

$P = I^2R$

$I = I_M sin2\pi ft$

$R = \frac{P}{I^2}$

$V = I \times R$

$R = \frac{V^2}{P}$

$\frac{1}{R_T} = \frac{1}{R_1} + \frac{1}{R_2} + \cdots \frac{1}{R_N}$

Copyright reserved