higher education & training

Department:
Higher Education and Training
REPUBLIC OF SOUTH AFRICA

MARKING GUIDELINE

NATIONAL CERTIFICATE

RADIO AND TELEVISION THEORY N1

29 November 2023

This marking guideline consists of 6 pages.

Copyright reserved

QUESTION 1

1.1 $I_1 = \frac{P}{V}$
$= \frac{18}{6}$
= 3 A

1.2 $I_2 = \frac{P}{V}$
$= \frac{12}{6}$
= 2 A

1.3 $I_T = I_1 + I_2$
= 3 + 2
= 5A

1.4 $R_1 = \frac{P_1}{I_1^2}$

$= \frac{18}{3^2}$
= 2 Ω

1.5 $R_2 = \frac{P_2}{I_2^2}$

$= \frac{12}{2^2}$
= 3 Ω

(5 × 2) **[10]**

QUESTION 2

2.1 Cycle is defined as that part of a wave between two successive points having the same value and at which the wave is varying in the same direction. (2)

2.2 Period is the time taken for one complete cycle. The periodic time is usually expressed by T. (2)

2.3 Bandwidth is half power points of the maximum voltage or current of the frequency. (2)

2.4 Frequency is the number of cycles completed per second. It is denoted by F and one cycle is known as one hertz. (2)

2.5 Wavelength of a particular frequency is the length of the path travelled by the wave during one cycle, that is during the periodic time. (3)
[11]

Copyright reserved

QUESTION 3

3.1 Capacity of capacitor
- The area of the plates
- The distance between the plates
- The dielectric material used between the plates.

3.2 Resistance of conductor
- The type of material
- The lenght of the wire
- The area of the wire

(2 × 3) **[6]**

QUESTION 4

4.1 J
4.2 I
4.3 H
4.4 G
4.5 F
4.6 E
4.7 D
4.8 C
4.9 B
4.10 A

(10 × 1) **[10]**

QUESTION 5

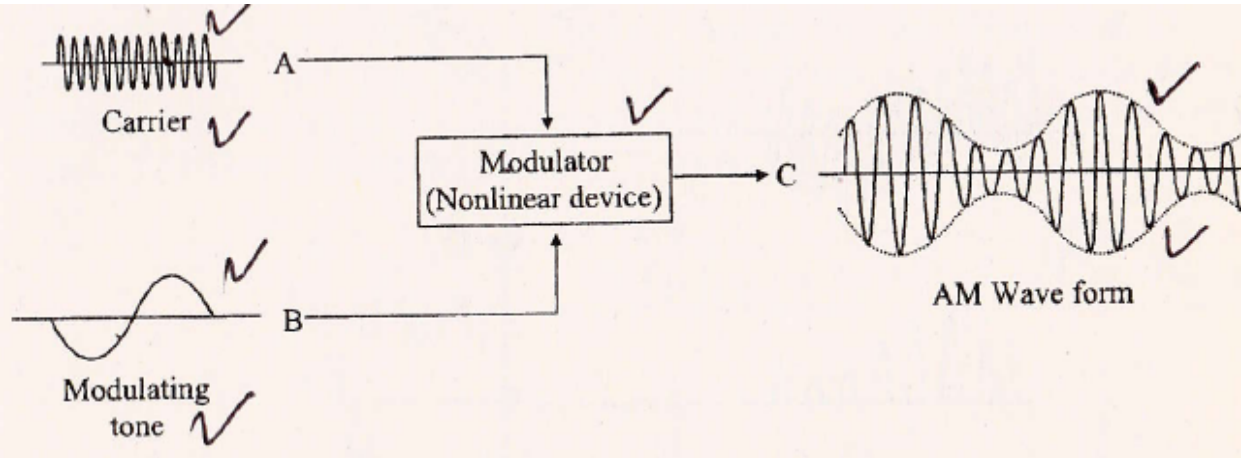

[7]

QUESTION 6

Black and white television

- The cathode ray tube must display a picture.
- The power supply feeds power to the different sections.
- It has signal-processing circuits to produce the video, sound and sync pulses from the broadcast signal.
- Scanning circuits to generate line and field waveforms.
- The loudspeaker to generate sound. (5 × 1) **[5]**

QUESTION 7

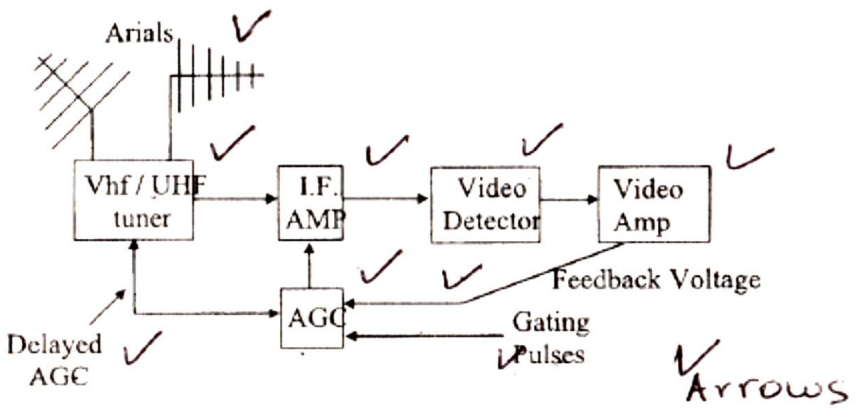

[10]

QUESTION 8

8.1 AGC – to maintain a relatively constant picture quality under varying reception conditions.

8.2 Video amp – to raise the voltage of signal from 1 V peak-to-peak to 150 V. This is required to drive the cathode-ray tube from black to peak white

8.3 Tuner (front-end) – is used to select a signal received from the antenna **.**

8.4 Sync separator – this circuit provides synchronising pulses to the line and field oscillators.

8.5 The line oscillator – the purpose of this circuit is horizontal scanning of the screen with an electron beam.

(5 × 2) **[10]**

Copyright reserved

QUESTION 9

9.1 Intermediate frequency

9.2 Direct current

9.3 Audio frequency

9.4 Radio frequency

9.5 Root mean square

(5 × 1) **[5]**

QUESTION 10

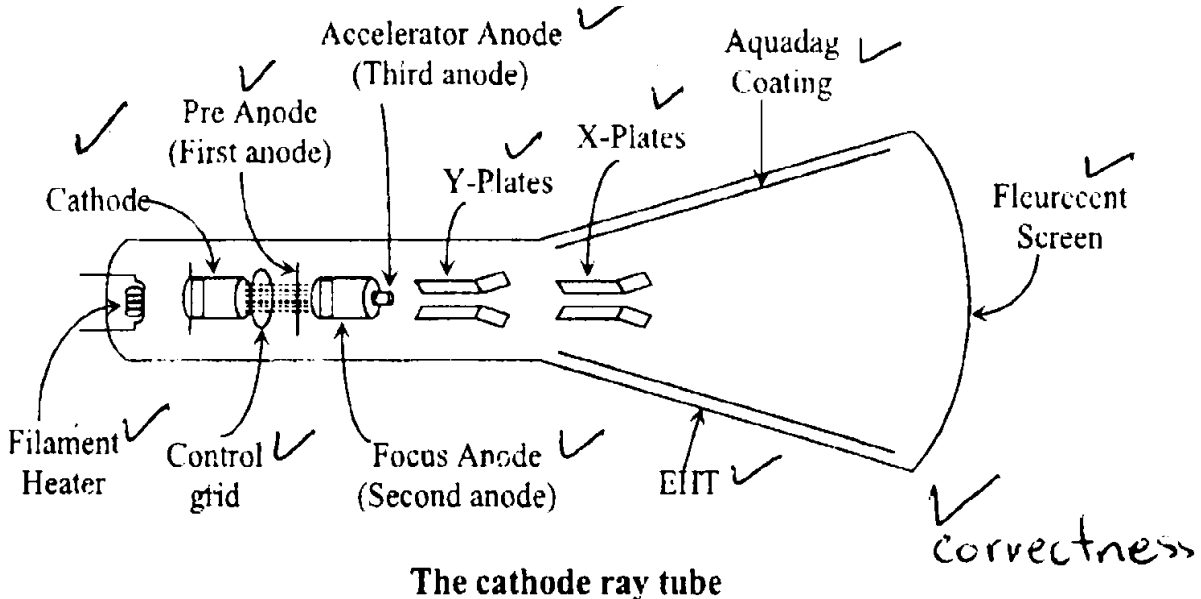

The cathode ray tube

[12]

QUESTION 11

- Volts/division
- Time/division
- Brightness
- Focus
- Y-shift
- X-shift
- Mode
- AC – DC ground (8 × 1) **[8]**

QUESTION 12

SINE WAVE BY ROTATING COIL IN A MAGNETIC FIELD

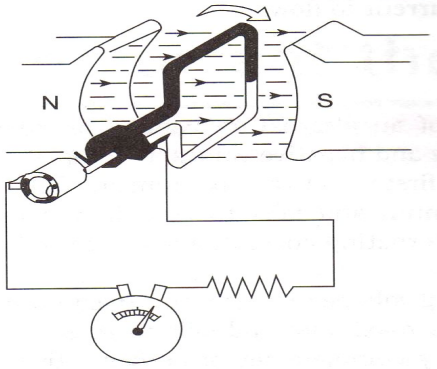

An elementary generator

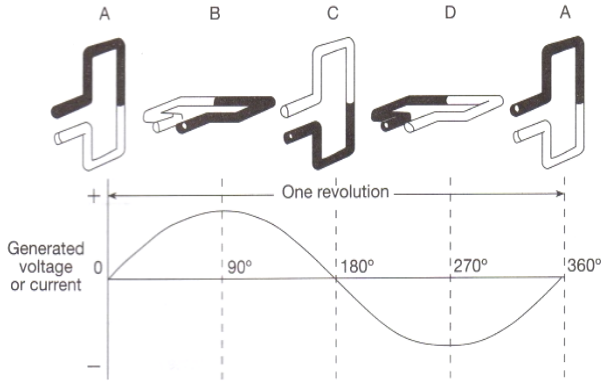

One revolution of the generator

(6 × 1) **[6]**

TOTAL: 100

Copyright reserved