higher education & training

Department:
Higher Education and Training
REPUBLIC OF SOUTH AFRICA

NATIONAL CERTIFICATE

PLATING AND STRUCTURAL STEEL DRAWING N1

(8090091)

16 November 2022 (X-paper)
09:00–13:00

Requirements: ONE A2 drawing paper.

Drawing instruments and nonprogrammable calculators may be used.

This question paper consists of 5 pages and 2 diagram sheets.

Copyright reserved

DEPARTMENT OF HIGHER EDUCATION AND TRAINING
REPUBLIC OF SOUTH AFRICA

NATIONAL CERTIFICATE
PLATING AND STRUCTURAL STEEL DRAWING N1
TIME: 4 HOURS
MARKS: 100

INSTRUCTIONS AND INFORMATION

1. Answer all the questions.
2. Read all the questions carefully.
3. Number the answers according to the numbering system used in this question paper.
4. Show all construction lines on all the questions.
5. Use only ONE A2 DRAWING SHEET.
6. Draw on both sides of the A2 DRAWING SHEET.
7. Add a title and scale to each answer.
8. Write neatly and legibly.

Copyright reserved

QUESTION 1

FIGURE 1, DIAGRAM SHEET 1 (attached), shows a right hexagonal prism cut at 60° which is going to be used as a model in the class.

Draw to SCALE 1:2, the following in first-angle orthographic projection:

1.1 The top view (2)

1.2 The front view (2)

1.3 The left view (4)

1.4 The true shape of the cut in the direction of Arrow A. (4)

Mark allocation:

Accuracy	2
Title and Scale	1

(3)
[15]

QUESTION 2

FIGURE 2, DIAGRAM SHEET 1 (attached), shows the front view and an incomplete top view of a cone. The cone is going to be used in a milling company as a storage device.

Draw to SCALE 1:2, the following in first-angle orthographic projection:

2.1 The front view (2)

2.2 The top view (2)

2.3 The left view (4)

2.4 The true shape of the cut in the direction of Arrow A. (4)

Mark allocation:

Accuracy	2
Title and Scale	1

(3)
[15]

Copyright reserved

QUESTION 3

FIGURE 3, DIAGRAM SHEET 1 (attached), shows a front view of an oblique cone. The cone will be used on a ventilation system in the welding workshop. The joint line of the pattern is at X–X.

Draw to SCALE 1:5, the following:

3.1 The given view of the oblique cone (3)

3.2 The pattern of the plate to make the oblique cone (9)

Mark allocation:

Accuracy	2
Title and Scale	1

(3)
[15]

QUESTION 4

FIGURE 4, DIAGRAM SHEET 1 (attached), shows a 90° lobster-back bend that is going to be used in an air-conditioning plant. The joint of the segment is at X–X.

Draw to SCALE 1:5, the following:

4.1 The given view of the lobster-back bend (3)

4.2 The pattern of the segment marked **A** (10)

Mark allocation:

Accuracy	1
Title and Scale	1

(2)
[15]

Copyright reserved

QUESTION 5

FIGURE 5, DIAGRAM SHEET 2 (attached), shows an oblique T-piece consisting of TWO unequal pipes that will be used in the exhaust system of a car. The joint of the pattern is at X–X.

Draw, to SCALE 1:1, the following:

5.1 The given views (4)

5.2 The construction of the line of penetration between TWO pipes (3)

5.3 The shape of the hole in the main (3)

5.4 The pattern of the plate to make the branch pipe (8)

Mark allocation:

Accuracy	1
Title and Scale	1

(2)
[20]

QUESTION 6

FIGURE 6, DIAGRAM SHEET 2 (attached), shows TWO views of a square-to-round transition piece that will be used on a fume-extraction machine. The joint of the pattern must be at X–X.

Draw, to SCALE 1:1, the following:

6.1 The TWO given views (3)

6.2 The pattern of the plate to form the square-to-round transition piece (14)

Mark allocation:

Accuracy	2
Title and Scale	1

(3)
[20]

TOTAL: 100

Copyright reserved

DIAGRAM SHEET 1

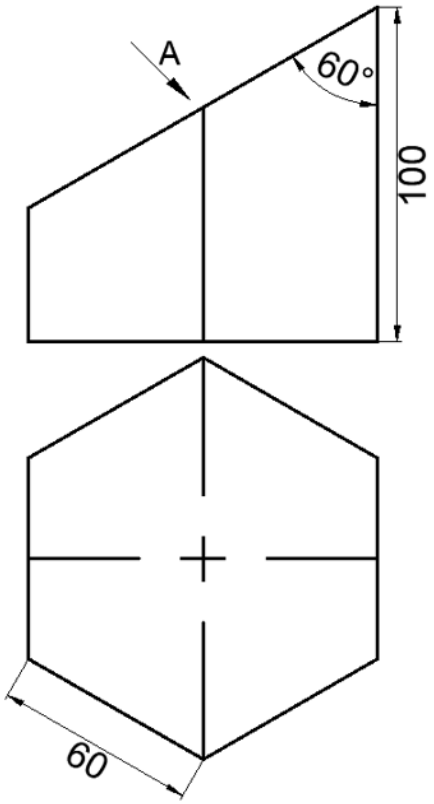

FIGURE 1

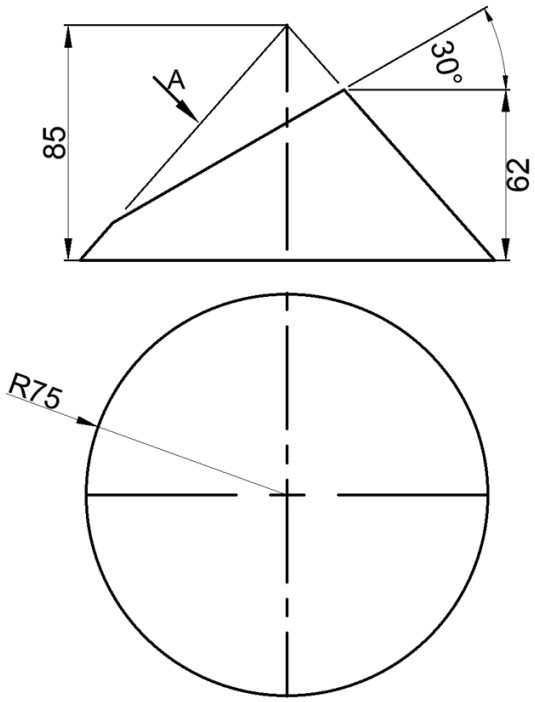

FIGURE 2

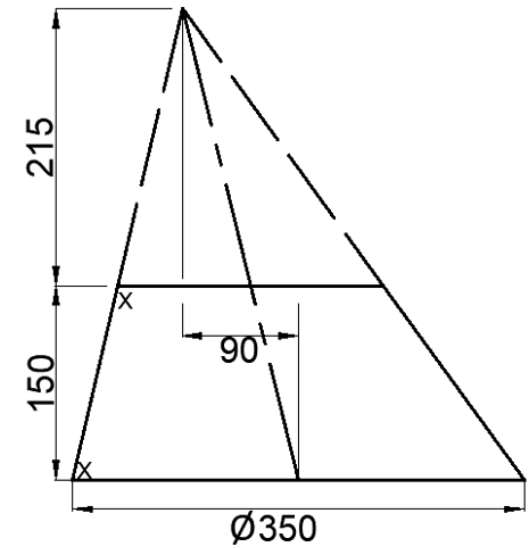

FIGURE 3

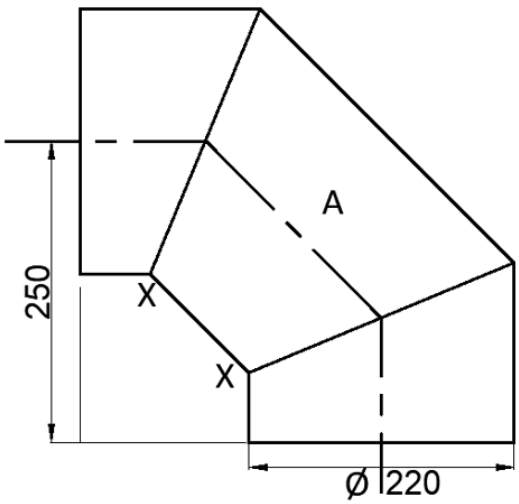

FIGURE 4

Copyright reserved

DIAGRAM SHEET 2

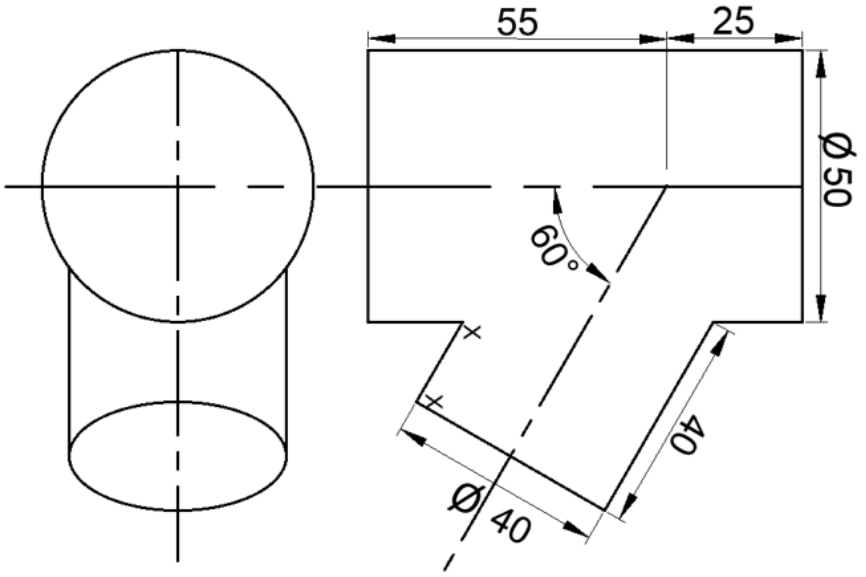

FIGURE 5

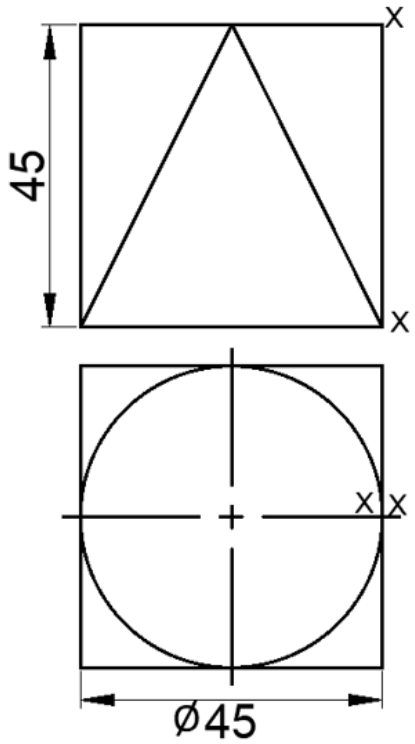

FIGURE 6

Copyright reserved