higher education & training

Department:
Higher Education and Training
REPUBLIC OF SOUTH AFRICA

MARKING GUIDELINE

NATIONAL CERTIFICATE

PLATING AND STRUCTURAL STEEL DRAWING N1

16 November 2022

This marking guideline consists of 7 pages.

Copyright reserved

QUESTION 1

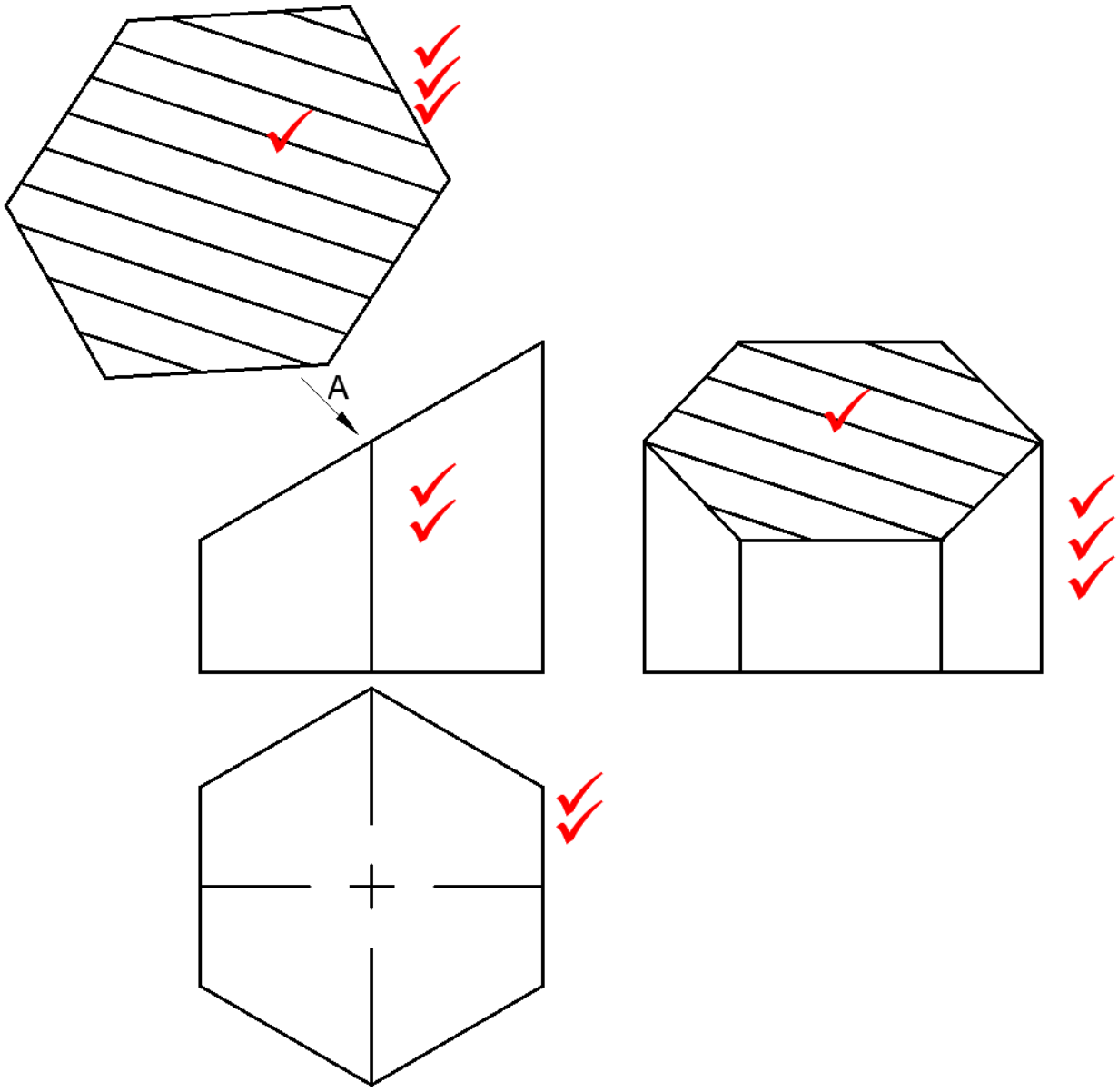

MARK ALLOCATION	
TOP VIEW	2
FRONT VIEW	2
LEFT VIEW	4
SHAPE OF THE CUT	4
ACCURACY	2
TITLE AND SCALE	1
TOTAL	15

[15]

QUESTION 2

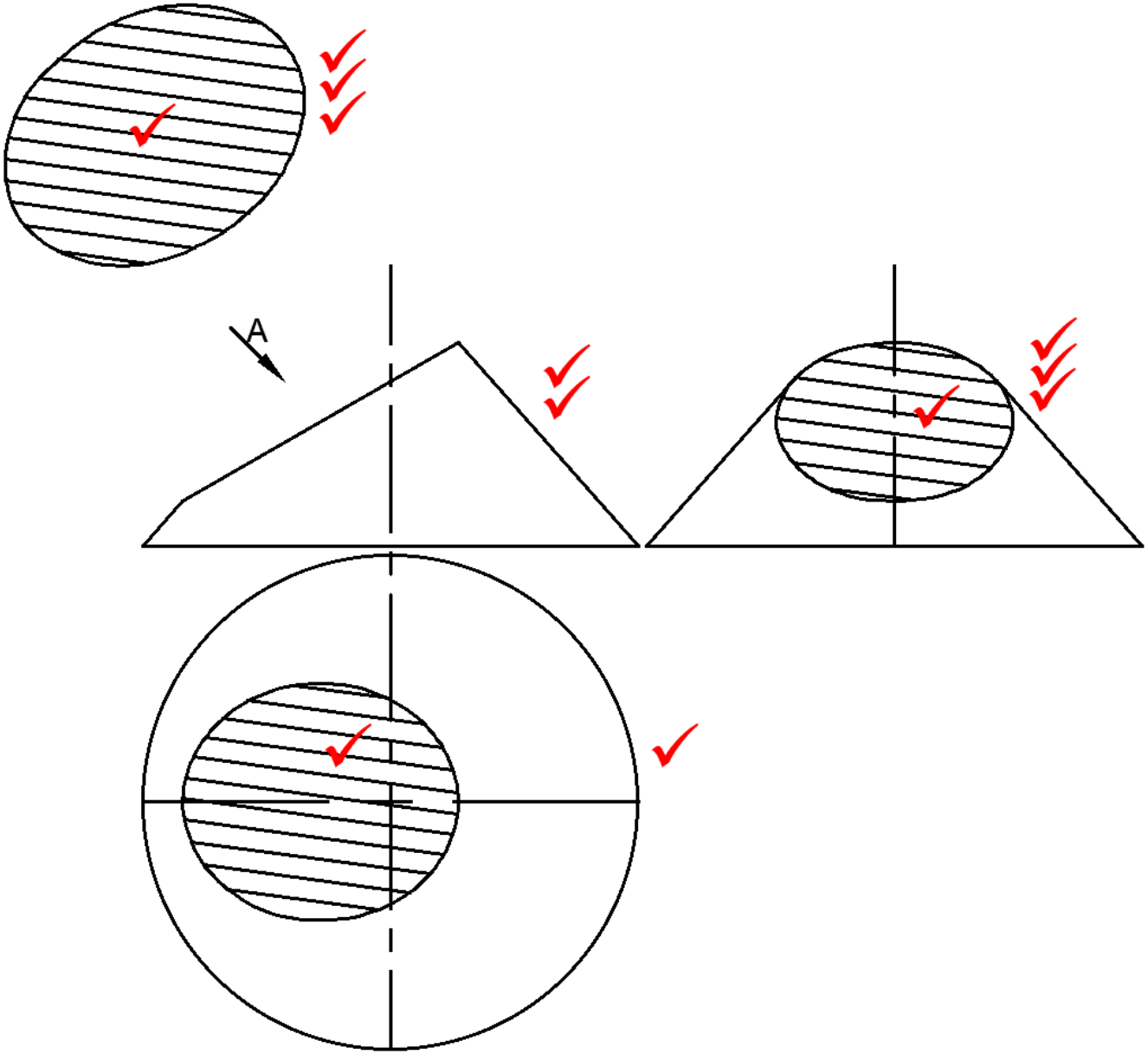

MARK ALLOCATION	
FRONT VIEW	2
TOP VIEW	2
LEFT VIEW	4
SHAPE OF THE CUT	4
ACCURACY	2
TITLE AND SCALE	1
TOTAL	15

[15]

Copyright reserved

QUESTION 3

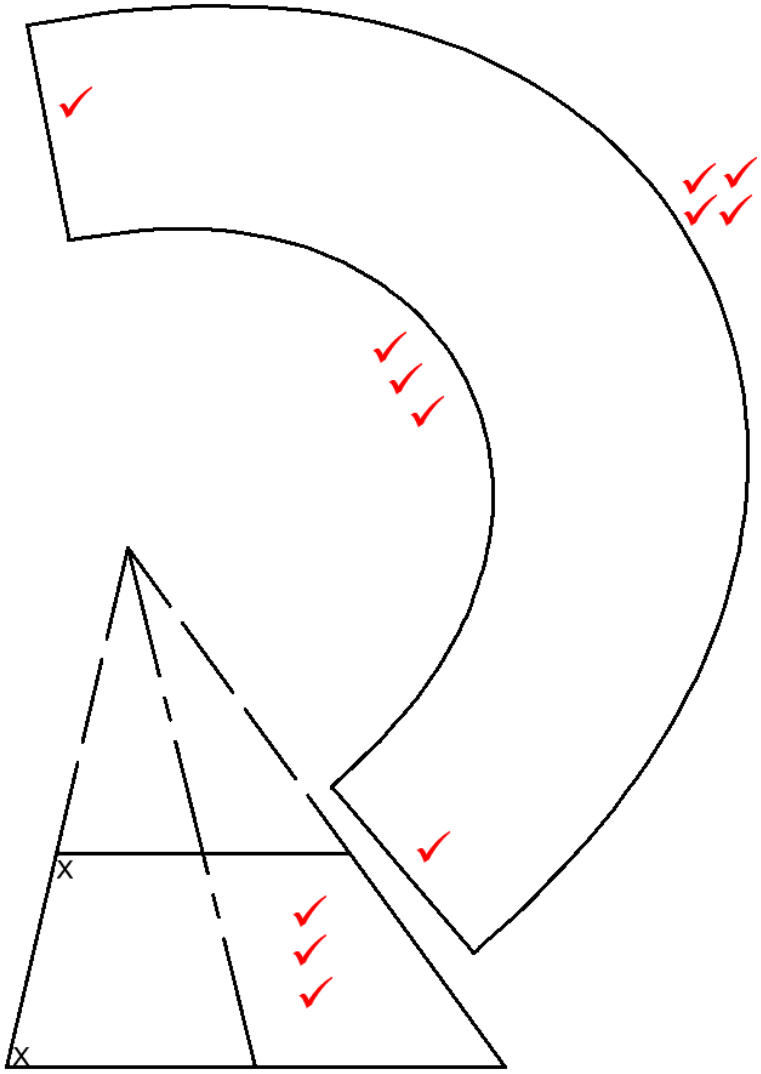

MARK ALLOCATION	
GIVEN VIEW	3
DEVELOPMENT	9
ACCURACY	2
TITLE AND SCALE	1
TOTAL	15

[15]

QUESTION 4

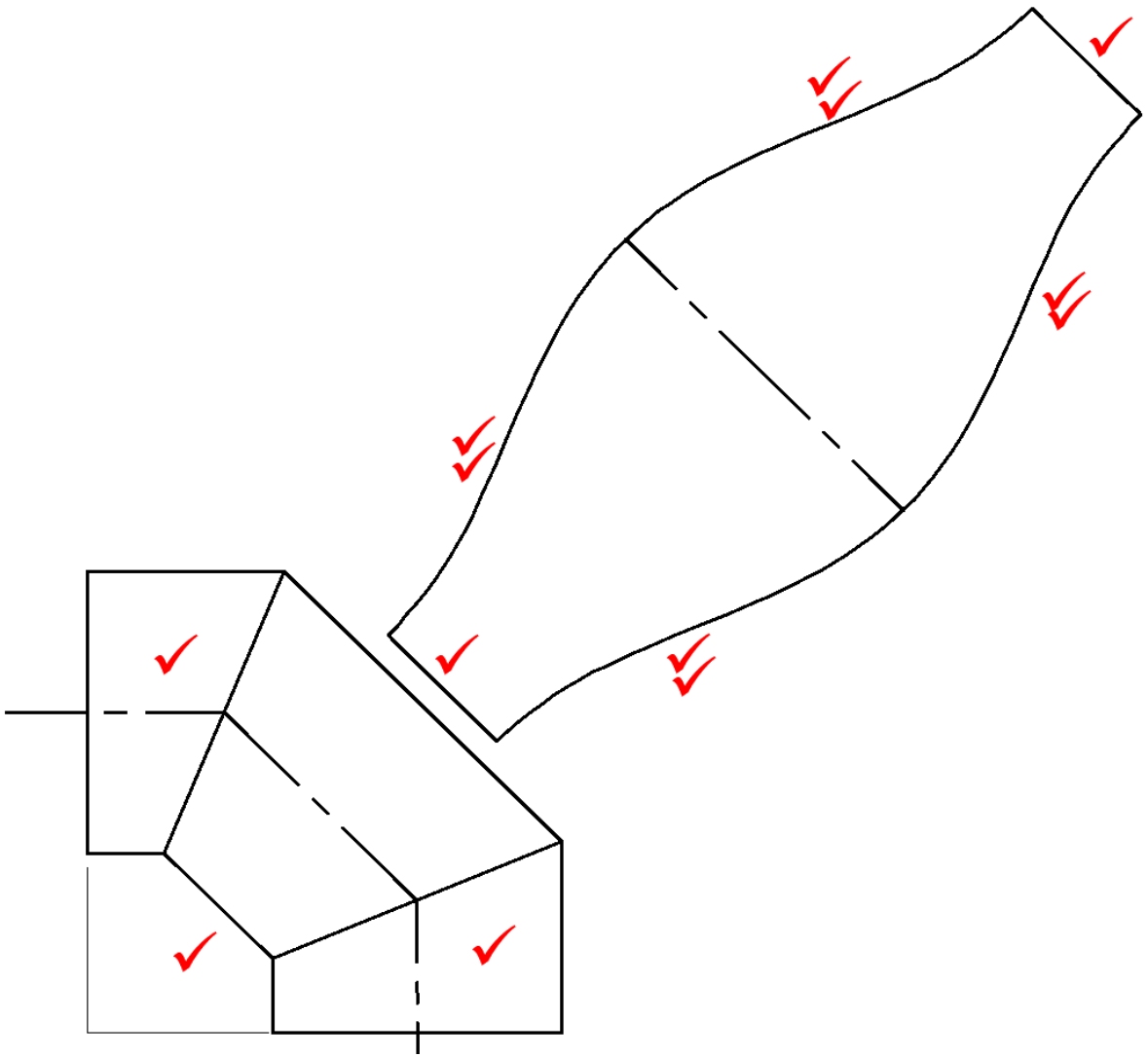

MARK ALLOCATION	
GIVEN VIEW	3
DEVELOPMENT	10
ACCURACY	1
TITLE AND SCALE	1
TOTAL	15

[15]

Copyright reserved

QUESTION 5

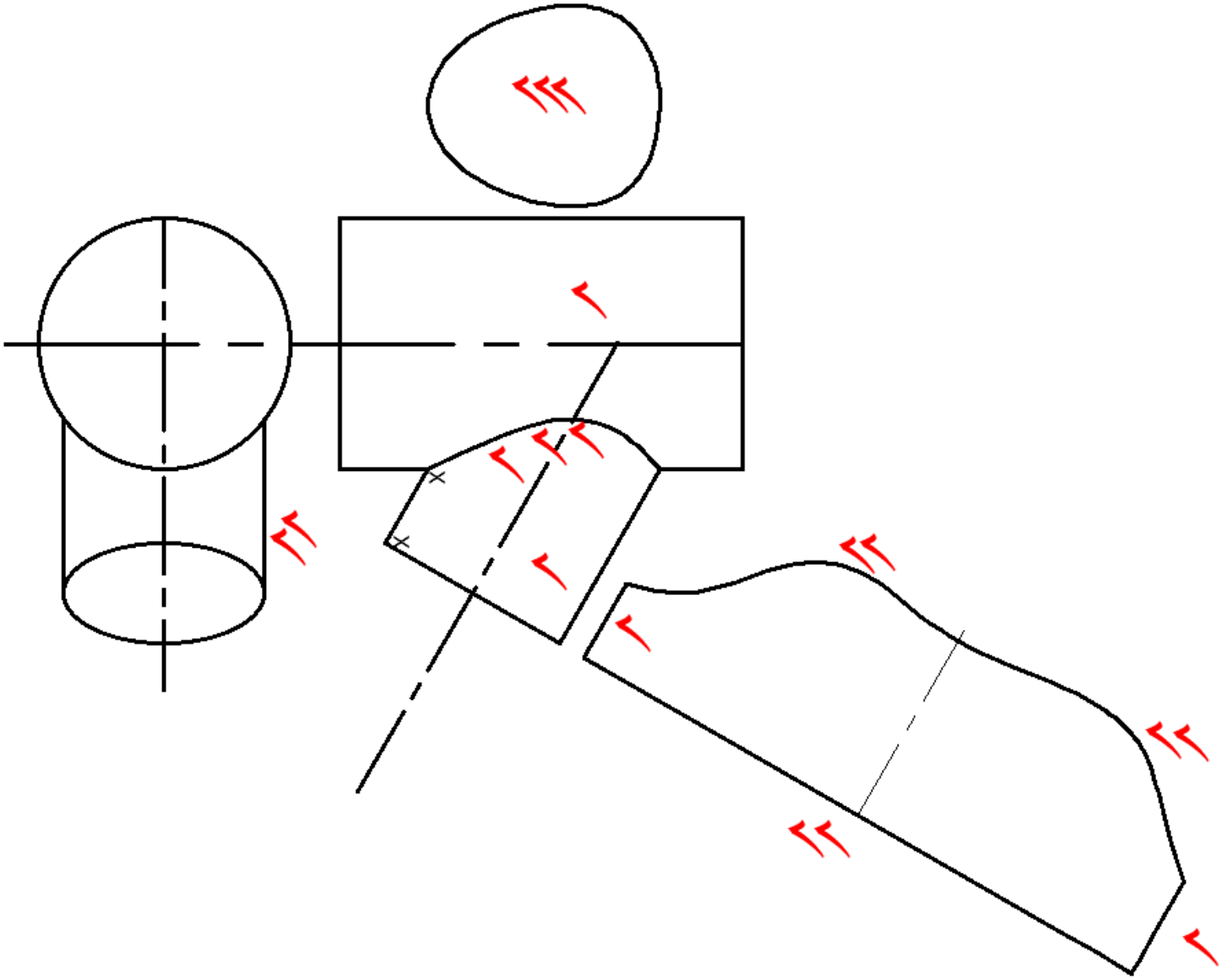

MARK ALLOCATION	
GIVEN VIEWS	4
PENETRATION	3
SHAPE OF HOLE	3
DEVELOPMENT	8
ACCURACY	1
TITLE AND SCALE	1
TOTAL	20

[20]

Copyright reserved

QUESTION 6

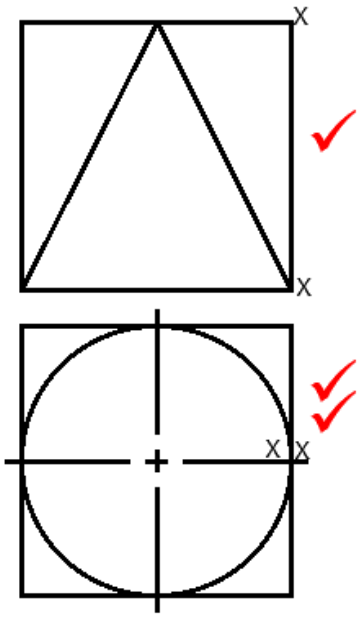

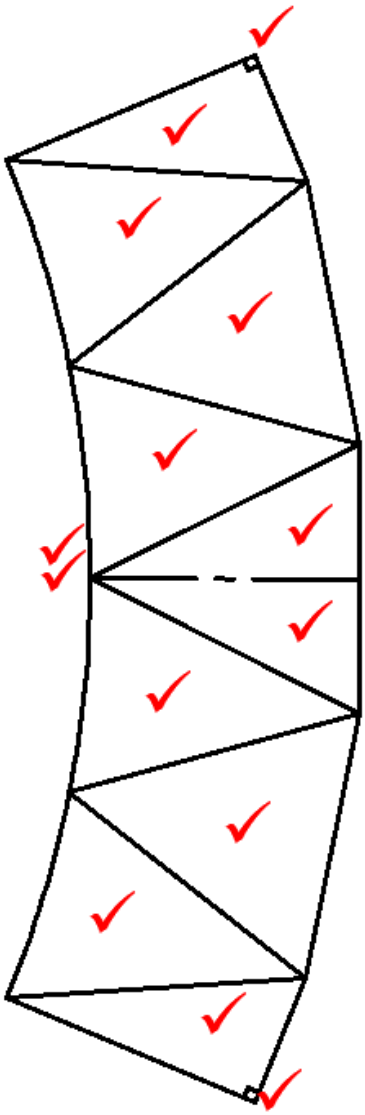

MARK ALLOCATION	
GIVEN VIEW	3
DEVELOPMENT	14
ACCURACY	2
TITLE AND SCALE	1
TOTAL	**20**

[20]

TOTAL: 100

Copyright reserved