higher education & training

Department:
Higher Education and Training
REPUBLIC OF SOUTH AFRICA

NATIONAL CERTIFICATE

PLATING AND STRUCTURAL STEEL DRAWING N1

(8090091)

22 November 2023 (X-paper)
09:00–13:00

REQUIREMENTS: A2 drawing sheet

Drawing instruments and nonprogrammable calculators may be used.

This question paper consists of 5 pages and a 2-page diagram sheet.

052Q1E2322

Copyright reserved

DEPARTMENT OF HIGHER EDUCATION AND TRAINING
REPUBLIC OF SOUTH AFRICA

NATIONAL CERTIFICATE
PLATING AND STRUCTURAL STEEL DRAWING N1
TIME: 4 HOURS
MARKS: 100

INSTRUCTIONS AND INFORMATION

1. Answer all the questions.
2. Read all the questions carefully.
3. Number the answers according to the numbering system used in this question paper.
4. Show construction lines on all answers.
5. Use only ONE A2 DRAWING SHEET.
6. Draw on both sides of the A2 DRAWING SHEET.
7. Add a title and scale to each answer.
8. Use only a blue or black pen.
9. Write neatly and legibly.

Copyright reserved

QUESTION 1

FIGURE 1, DIAGRAM SHEET 1 (attached) shows an incomplete front and top view of a truncated pyramid with a 30° slope. The pyramid will be used as a model in a drawing class.

Use a scale of 1:1 and draw the following in first-angle orthographic projection:

1.1 The complete top view (3)

1.2 The complete front view (2)

1.3 The true shape of the face in the direction of arrow 'A' (6)

Marks will be allocated as follows:

Linework	1
Accuracy	2
Title and scale	1

(4)
[15]

QUESTION 2

FIGURE 2, DIAGRAM SHEET 1 (attached) shows pipe set consisting of two square pipes joint by a rectangular pipe. The pipe set will be used on a motorcycle.

Use a scale of 1:2 to draw the following:

2.1 The given view (3)

2.2 Develop the pattern of the plate marked 'A'. (8)

Marks will be allocated as follows:

Linework	1
Accuracy	2
Title and scale	1

(4)
[15]

Copyright reserved

QUESTION 3

FIGURE 3, DIAGRAM SHEET 1 (attached) shows a right cone with a 20° slope at the top. The right cone will be the ducting in a dust extraction plant.

Use a scale of 1:5 to draw the following:

3.1 The given view (2)

3.2 The pattern of the plate required to form the right cone. Open the pattern on the line marked X-X. (10)

Marks will be allocated as follows:

Linework	1
Accuracy	1
Title and scale	1

(3)
[15]

QUESTION 4

FIGURE 4, DIAGRAM SHEET 1 (attached) shows a 90° lobster-back bend. The lobster-back bend will be used in a ducting extraction plant at a glass factory.

Use a scale of 1:10 to draw the following:

4.1 The given view of the lobster-back bend (5)

4.2 The pattern of the plate to manufacture the segment marked A. Open the pattern on the line marked X-X. (8)

Marks will be allocated as follows:

Accuracy	1
Title and scale	1

(2)
[15]

Copyright reserved

QUESTION 5

FIGURE 5, DIAGRAM SHEET 2 (attached) shows two views of an oblique T-piece consisting of two pipes of unequal dimeters. The T-piece is part of the piping on a water pipeline.

Use a scale of 1:2 to draw the following:

5.1 The two given views of the oblique T-piece in first-angle orthographic projection (5)

5.2 The line of penetration between the two pipes (3)

5.3 The shape of the hole in the main (4)

5.4 The pattern of the plate to make the branch pipe. Open the pattern on the line marked X-X. (7)

Marks will be allocated as follows:

Title and scale	1

(1)
[20]

QUESTION 6

FIGURE 6, DIAGRAM SHEET 2 (attached) shows two views of a rectangle-to-rectangle transition piece. The transition piece will be used in a furniture manufacturing factory.

Use a scale of 1:5 to draw the following:

6.1 The two given views in first-angle orthographic projection (3)

6.2 The pattern of the plate to form the rectangle-to-rectangle transition piece. Open the pattern on the line marked X-X. (12)

Marks will be allocated as follows:

Linework	2
Accuracy	2
Title and scale	1

(5)
[20]

TOTAL: 100

Copyright reserved

DIAGRAM SHEET 1

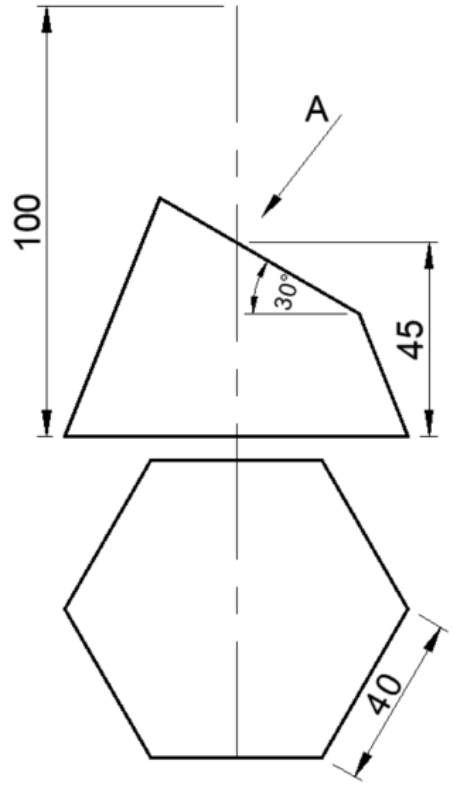

FIGURE 1

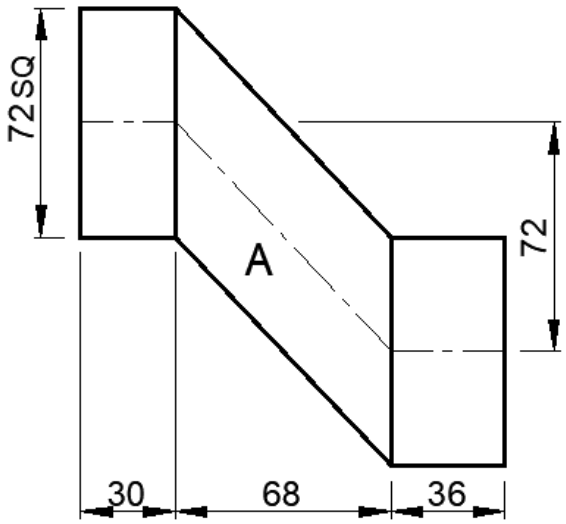

FIGURE 2

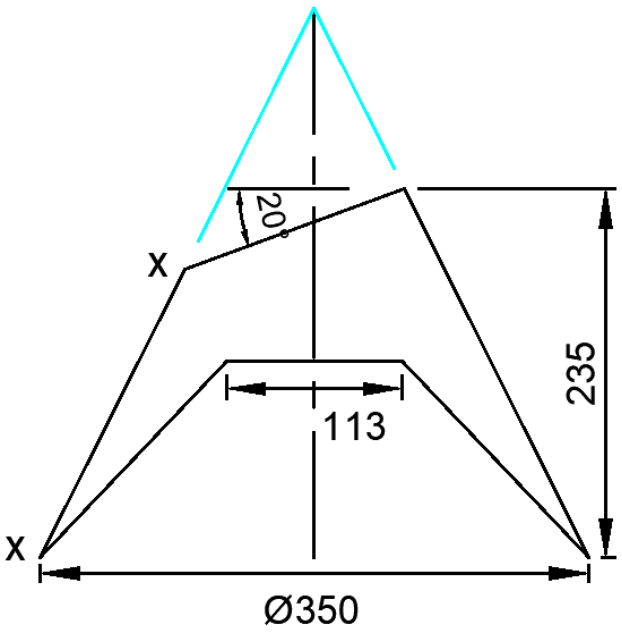

FIGURE 3

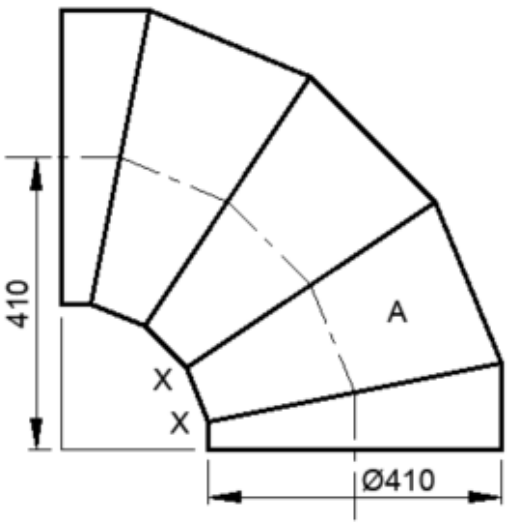

FIGURE 4

Copyright reserved

DIAGRAM SHEET 2

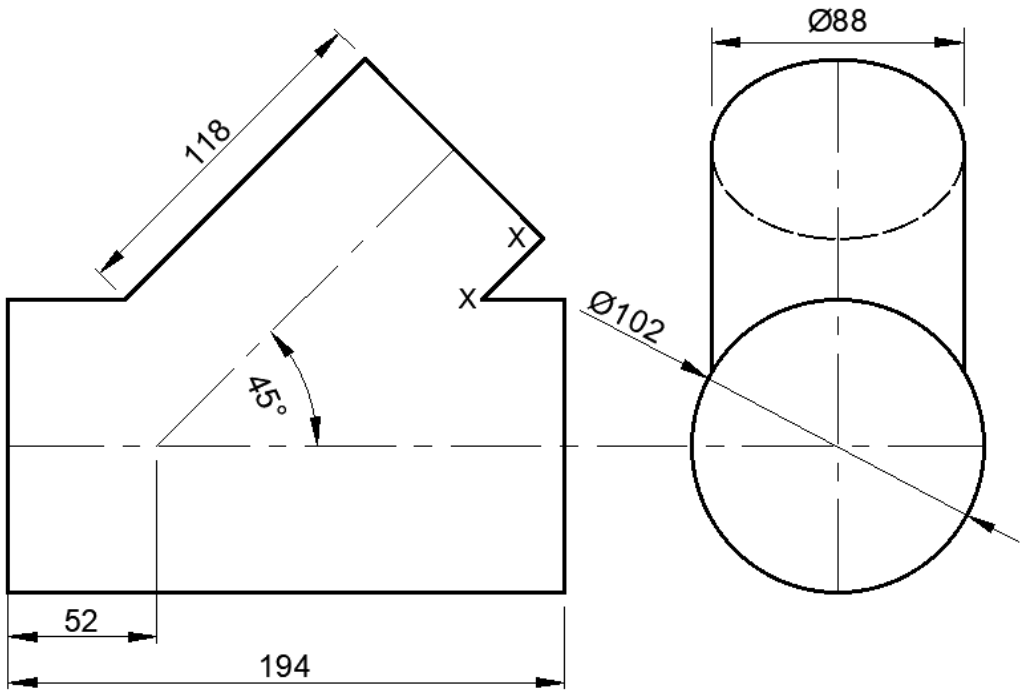

FIGURE 5

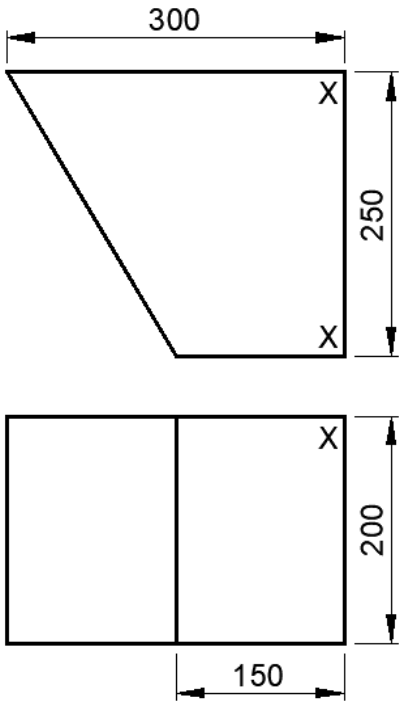

FIGURE 6

Copyright reserved