higher education & training

Department:
Higher Education and Training
REPUBLIC OF SOUTH AFRICA

MARKING GUIDELINE

NATIONAL CERTIFICATE

PLANT OPERATION THEORY N1

29 November 2023

This marking guideline consists of 5 pages.

Copyright reserved

QUESTION 1

1.1 A
1.2 B
1.3 D
1.4 A
1.5 D

(5 × 1) **[5]**

QUESTION 2

2.1 False
2.2 True
2.3 True
2.4 False
2.5 True

(5 × 1) **[5]**

QUESTION 3

3.1 Pure substances are not mixed with anything; they are made up of one type of particle✓ only such as one type of atom or one type of molecule.✓ (2)

3.2
3.2.1 24
3.2.2 12
3.2.3 Sodium ion
3.2.4 11
3.2.5 12

(5 × 1) (5)

3.3
3.3.1 NaCℓ
3.3.2 H_2O

(2 × 1) (2)

3.4 $NaOH + HC\ell \longrightarrow NaCl$ ✓+ H_2O ✓ (2)

3.5
- Has a sour taste
- Conducts electricity when dissolved in water
- It turns blue litmus red
- It liberates hydrogen when reacting with metals
- It can be neutralised by bases (5)

3.6
3.6.1 Physical change
3.6.2 Chemical change

(2 × 1) (2)
[18]

QUESTION 4

4.1
- Gate valve
- Diaphragm valve
- Safety valve
- Relief valve
- Non-return valve
- Ball valve
- Foot valve

(Any 5 ×1) (5)

4.2 Today lead pipes are limited to plumbing. Formerly it was used in dwellings but has been abandoned to a large extent as a result of the danger of lead poisoning.
Lead pipes are not resistant to high pressures, but are resistant to corrosion.
Lead pipes are formed by pressing melted lead through forms of the required measurements with the aid of a hydraulic plunger to obtain long seamless pipes. (4)

4.3 The density of a liquid is the mass of the mass per liquid volume✓ thereof and more energy is needed to displace a fluid with a higher density over the same time period as a fluid with low density.✓ The higher the density of the fluid, the greater the loss of pressure in the pipe.✓ (3)

4.4

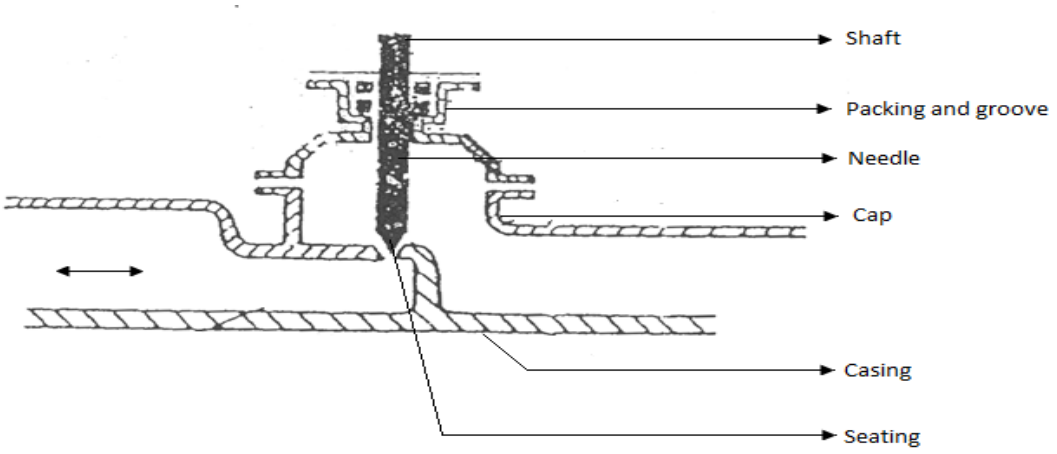

(1 mark for each correct label 6 × 1)
(1 mark for neatness) (7)
[19]

QUESTION 5

5.1 The quantity of fluid to be pumped✓
Distance and height to which it must be supplied✓
Time taken to be done✓
Pressure at which it has to supplied ✓
Viscosity of fluid✓ (5 ×1) (5)

5.2
- Small floor is required
- Initial costs low
- As centrifugal pumps do not have valves, there are no sensitive parts to be damaged
- High working speed makes direct connection to primary source of power possible
- Small, light foundation required
- A centrifugal pump is quite adaptable
- Motor is smaller because of the high speed of the pump
- Vibration very limited
- Discharge of liquid is continuous and without shocks
- No air containers or relievers are required
- Flow of water can be controlled automatically without stopping pump or causing damage to pump or pipes (Any 3 × 1) (3)

5.3 5.3.1 Power = Work done ÷ time in sec
$= 16 \times 10^2 \div 18 \div 60^2$
= 246,9 kW✓✓

5.3.2 Input = Output × efficiency
= 246,7 × 75%
= 329,2 kW✓

(3 × 2) (6)
[19]

QUESTION 6

6.1 6.1.1 Distillation − It is the separation of components of a liquid mixture through stages of heating and cooling✓ until a pure, light product is obtained towards the top of the plant✓ and a pure heavy product at the bottom.✓

6.1.2 Condensation is the opposite of evaporation. The movement of vapour molecules decreases as a result of cooling;✓ the molecules move nearer to each other;✓ the force of attraction becomes stronger which cooling and the molecules form a liquid.✓

(2 ×3) (6)

6.2 Pollution is a process through which the air, water or soil is contaminated or dirty✓ and is unfit for its intended use.✓ (2)

6.3
- Industrial pollution
- Agricultural pollution
- Waste-water pollution
- Pollution arising from nuclear power generation, and
- Water pollution caused by air pollution (5)

6.4 6.4.1
- $MgSO_4$
- $MgCl_2$
- $CaSO_4$
- $CaC\ell_2$ (Any 2 × 1) (2)

6.4.2 Washing soda (1)

6.5
- Distilled water is waters from which many impurities have been removed✓ through distillation.✓
- Soft water is when there is no lime✓ dissolved in the water.✓ (2 × 2) (4)

[20]

QUESTION 7

7.1
- Extinguishing by cooling✓

Spraying water cools the fuel, until it does not have sufficient heat to burn. The temperature of the fire is brought down to below the ignition temperature.✓

- Choking✓

When there is less than 15% of oxygen in the combustion air, a fire will choke and burning cannot proceed. The oxygen levels in the combustion air are reduced to lower than 15%.✓

- Starving✓

According to this method the fuel supply is cut off and the fire will eventually die down.✓ (3 × 2) (6)

7.2
- Control the temperature, e.g. water sprinkling system if the pressure and temperature of the container becomes high.
- They are usually painted a shiny colour to reflect light.
- A vapour space should be left above the liquid for expansion when the temperature increases.
- Safety measures against over pressurisation and fire should be in place.
- The high pressure facilities the distribution of gases by pipeline.
- Smaller spaces are required to store large volumes of gas in liquid form.

(Any 5 × 1) (5)

7.3 $V = \frac{4\pi d^2}{3}$

$= \frac{4\pi 2^3}{3}$ ✓

$= \frac{25,136}{}$ ✓

$= 8,78\ m^3$ ✓ (3)

[14]

TOTAL: 100

Copyright reserved