higher education & training

Department:
Higher Education and Training
REPUBLIC OF SOUTH AFRICA

NATIONAL CERTIFICATE

MOTOR TRADE THEORY N1

(11040651)

22 November 2022 (X-paper)
09:00–12:00

Drawing instruments may be used.

This question paper consists of 9 pages.

148Q1E2222

Copyright reserved

DEPARTMENT OF HIGHER EDUCATION AND TRAINING
REPUBLIC OF SOUTH AFRICA

NATIONAL CERTIFICATE
MOTOR TRADE THEORY N1
TIME: 3 HOURS
MARKS: 100

INSTRUCTIONS AND INFORMATION

1. Answer all the questions.
2. Read all the questions carefully.
3. Number the answers according to the numbering system used in this question paper.
4. Use only a black or blue pen.
5. Start each question on a new page.
6. Write neatly and legibly.

Copyright reserved

SECTION A

QUESTION 1

Various options are given as possible answers to the following questions. Choose the answer and write only the letter (A–D) next to the question number (1.1–1.10) in the ANSWER BOOK.

1.1 Used engine oil can be disposed of by …

A collecting it in a drum and recycling it.
B being buried in sand about 3 m deep.
C pouring it into a storm water drain.
D storing it in a container and putting it in refuse bins.

1.2 A plastic apron should be worn over an overall when working with …

A brake systems.
B engines and gearboxes.
C a work piece at the bench grinder.
D batteries.

1.3 The green and white colour-coded sign is classified as a … sign.

A warning
B mandatory
C information
D prohibitory

1.4 A direct cooling system includes the following component(s):

A A two-core down-flow radiator
B 50/50 premix coolant
C Both A and B
D None of the above

1.5 In which type of engine design is the compression ratio very high?

A A CI four-stroke engine
B A petrol two-stroke engine
C A rotary engine
D A turbocharged petrol four-stroke engine

1.6 Timing belts should be changed …

A every 40 000 km.
B every two years.
C according to the manufacturer's specifications.
D to improve the vehicle's performance.

Copyright reserved

1.7 Which ONE of the following pieces of equipment can be used to check an engine block for warpage?

A A micrometer
B A straight edge and feeler gauge
C A Vernier calliper
D A depth gauge

1.8 When the friction clutch plate is engaged, then …

A the clutch pedal is depressed.
B the clutch friction plate is not rotating with the flywheel.
C power and torque are transmitted to the transmission.
D All of the above.

1.9 The abbreviation SAE stands for …

A South African Engineers.
B Safety in Automotive Engines.
C Standard Auto Electronics.
D Society of Automotive Engineers.

1.10 Which ONE of the following is NOT a cause of high oil consumption?

A Leakage of oil from seals and gaskets
B Worn valve guides or valve stem seals
C Excessive use of the choke
D Clogged PCV valve

(10 × 1) **[10]**

QUESTION 2

Indicate whether the following statements are TRUE or FALSE by writing only 'True' or 'False' next to the question number (2.1–2.5) in the ANSWER BOOK.

2.1 During the exhaust phase of a petrol two-stroke engine, the piston moves down.

2.2 The rear tyres will wear faster on a front-engine, front-wheel-drive layout.

2.3 Air cooling systems have more components than liquid cooling systems.

2.4 A PCV valve regulates the oil pressure in an engine.

2.5 When removing a battery from a vehicle, always remove the positive cable first.

(5 × 1)

[5]

QUESTION 3

3.1 Choose a tool from COLUMN B that matches a description in COLUMN A. Write only the letter (A–H) next to the question number (3.1.1–3.1.5) in the ANSWER BOOK.

COLUMN A		COLUMN B	
3.1.1	To diagnose an engine misfire	A	load tester
3.1.2	To check for loss of coolant in an engine	B	fuel pressure gauge
3.1.3	To check or adjust the ignition timing	C	hydrometer
3.1.4	To check the voltage on a battery	D	compression tester
3.1.5	To check the fuel delivery on a fuel-injected engine	E	leakage tester
		F	multimeter
		G	stroboscopic timing light
		H	radiator pressure tester

(5 × 1) (5)

3.2 Complete the following sentences by writing only the missing word or words next to the question number (3.2.1–3.2.5) in the ANSWER BOOK.

3.2.1 The … valve opens and the piston moves up after completing the power stroke in a four-stroke engine.

3.2.2 As coolant temperature increases, the pressure in the system will …

3.2.3 The function of the … is to remove harmful evaporates that contaminate the oil from the crankcase.

3.2.4 … support the weight of the engine and also isolate noise and vibrations while driving.

3.2.5 Non-ferrous metal … iron.

(5 × 1) (5)

[10]

TOTAL SECTION A: 25

SECTION B

QUESTION 4

4.1 FIGURE 1 below is a sketch of a valve assembly. Name the labelled parts by writing only the name of the part next to the question number (4.1.1–4.1.7) in the ANSWER BOOK. (7)

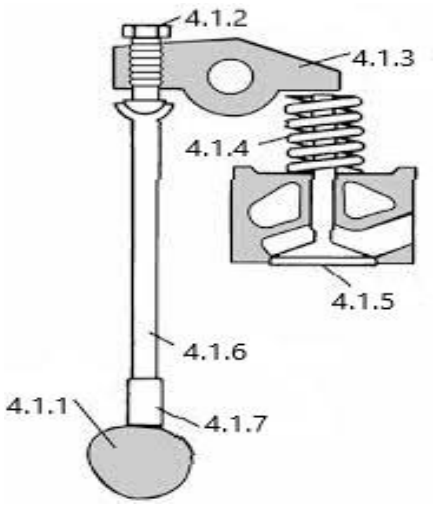

FIGURE 1

4.2 Explain why it is necessary to change engine oil regularly. (5)

4.3 Give THREE advantages of a rear-mounted, rear-wheel-drive vehicle. (3)

4.4 State THREE properties that a good anti-freeze/coolant should have. (3)

4.5 The radiator cap is an important component in the cooling system. List THREE functions of the radiator cap. (3)

[21]

QUESTION 5

5.1 Write down the definition of an *accident*. (2)

5.2 Explain FOUR benefits of practising good housekeeping in workshops. (4)

5.3 Identify the following safety signs by writing only the name of the sign next to the question number (5.3.1–5.3.4) in the ANSWER BOOK.

5.3.1



5.3.2 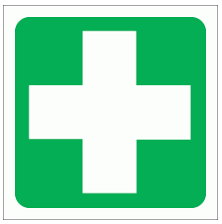

5.3.3 

5.3.4 

(4 × 1) (4)

5.4 List the precautions you would take when working with an angle grinder. (7)

5.5 Label the parts of the micrometer in FIGURE 2 by writing only the name of the part next to the question number (5.5.1–5.5.7) in the ANSWER BOOK. (7)

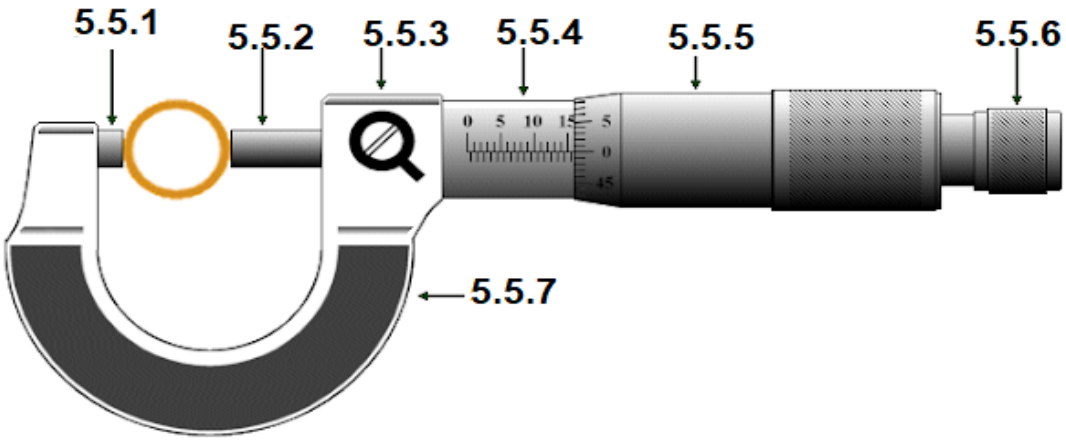

FIGURE 2

[24]

QUESTION 6

6.1 State THREE functions of the clutch system. (3)

6.2 Give TWO advantages of a clutch cable release mechanism. (2)

6.3 Explain how you would test a stationary vehicle for clutch slip. (4)

6.4 State TWO effects of a clutch with too much free play. (2)

6.5 FIGURE 3 below shows a view of a crankshaft. Label the parts by writing only the name of the part next to the question number (6.5.1–6.5.7) in the ANSWER BOOK. (7)



FIGURE 3

6.6 What is the main function of the crankshaft? (2)
[20]

QUESTION 7

7.1 Incorrect tyre pressure causes irregular tyre wear. Study FIGURE 4 below and write the corresponding tyre pressure effect next to the letter (A–C) in the ANSWER BOOK. (3)

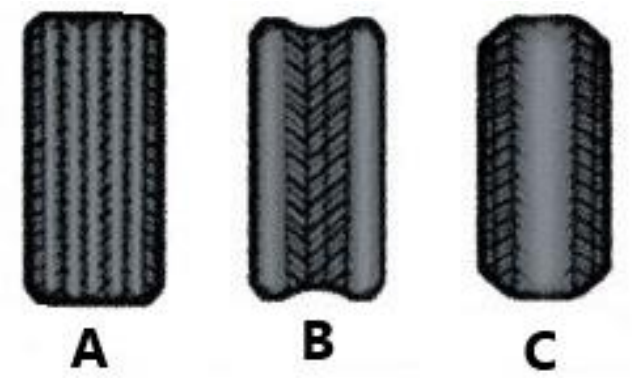

FIGURE 4

7.2 Give TWO advantages of a tubeless tyre. (2)

7.3 Sulphation is one of the main reasons for battery failure. State THREE causes of sulphation. (3)

7.4 Batteries can be connected in series or parallel, as shown in FIGURE 5 below. Indicate the correct connection by writing only the answer (A or B) next to the question number (7.4.1–7.4.2) in the ANSWER BOOK.

7.4.1 Series connection

7.4.2 Parallel connection

(2 × 1) (2)

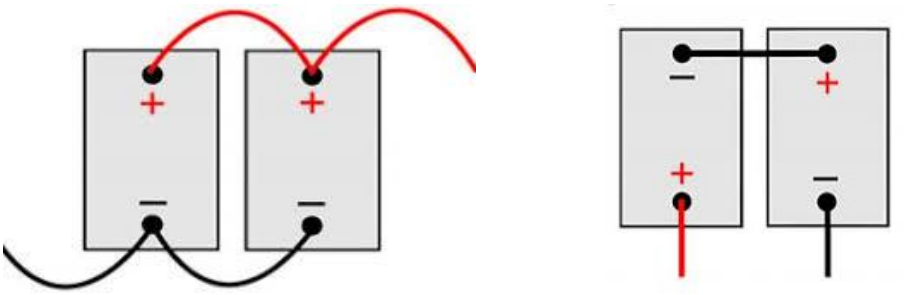

A **B**

FIGURE 5

[10]

TOTAL SECTION B: 75
GRAND TOTAL: 100

Copyright reserved