higher education & training

Department:
Higher Education and Training
REPUBLIC OF SOUTH AFRICA

NASIENRIGLYN

NASIONALE SERTIFIKAAT

INDUSTRIËLE ELEKTRONIKA N1

21 November 2023

Hierdie nasienriglyn bestaan uit 8 bladsye.

Kopiereg voorbehou

VRAAG 1

1.1 1.1.1 $20\,\mu\text{f} \times 1000 = 20000\text{nf}.$

1.1.2 $\frac{100pf}{1000} = 0.1nf$

(2 × 1) (2)

1.2
1.2.1 E
1.2.2 J
1.2.3 G
1.2.4 I
1.2.5 A
1.2.6 C
1.2.7 D
1.2.8 F
1.2.9 H
1.2.10 B

(10 × 1) (10)

1.3
- Dit is meer akkuraat as analoë multimeters
- Parallaksfoute word geëlimineer
- Dit is sterker
- Dit is kompak (4)

1.4
- Die geïnduseerde stroom vloei vir so lank as wat die magneet beweeg
- Die stroom verhoog namate die magneetspoed verhoog
- Hoe meer wikkelings, hoe groter is die stroom
- Dit magneet of die spoel kan beweeg word (4)

[20]

VRAAG 2

2.1 $R_T = R_1 + R_2 + R_3$
$R_T = 10 + 15 + 20$ ✓✓
$R_3 = 45\Omega$✓

$I_T = \frac{V}{R_T} = \frac{100}{45}$ ✓✓ $= 2.222A$✓ (6)

2.2 $V_1 = I_T R_1 = 2.222 \times 10\checkmark = 22.22V\checkmark$
$V_2 = I_T R_2 = 2.222 \times 15\checkmark = 33.33V\checkmark$
$V_3 = I_T R_3 = 2.222 \times 20\checkmark = 44.44V\checkmark$

OF

$$V_1 = \frac{R_1 \times V_T}{R_T} = \frac{10 \times 100}{45}\checkmark = 22.222V\checkmark$$

$$V_2 = \frac{R_2 \times V_T}{V_T} = \frac{15 \times 100}{45}\checkmark = 33.333V\checkmark$$

$$V_3 = \frac{R_3 \times V_T}{R_T} = \frac{20 \times 100}{45}\checkmark = 44.444V\checkmark$$ (6)

2.3 $R_T = R_{L1} + R_{L2}$
$R_T = 10 + 15\checkmark$
$R_T = 25\Omega\checkmark$

$P = I^2R$
$P = 2.222^2 \times 25\checkmark$
$P = 123.432W\checkmark$

OF

$P_1 = I^2R$
$P_1 = 2.222^2 \times 10$
$P_1 = 49.373W\checkmark$

$P_2 = I^2R$
$P_2 = 2.222^2 \times 15$
$P_2 = 74.059W\checkmark$

$P_T = P_1 + P_2$
$P_T = 49.373 + 74.059\checkmark$
$P_T = 123.432W\checkmark$ (4)

2.4
- Geel
- Violet
- Bruin
- Silwer (4)

[20]

VRAAG 3

3.1 3.1.1 Per garde Celsius
3.1.2 Ohmmeters
3.1.3 Hertz
3.1.4 Volt
3.1.5 Henry

(5 × 1) (5)

3.2 $R = P\ \frac{l}{A}$

$1.73 = \frac{0.0173 \times 10^{-6}\ x\ l}{10\ \times\ 10^{-6}}$ ✓

$l = 1000m$ ✓ (3)

3.3 3.3.1

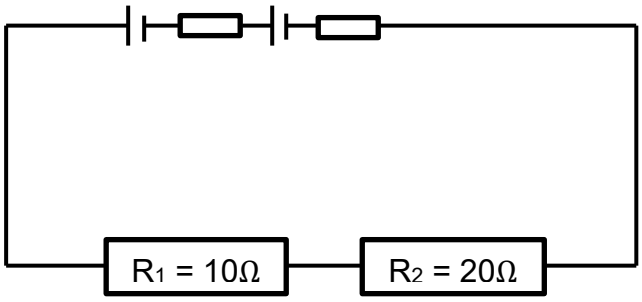

1 punt = elke sel en interne weerstand
1 punt = elke benoemde weerstand
Totaal = 4 punte

3.3.2 $R_T = R_1 + R_2$

$R_T = 10 + 20$

$R_T = 30\Omega$ ✓

$I = \frac{E}{R_T + r}$

$I = \frac{(1.5\ \times\ 2)}{30 + 0.2}$ ✓

$I = \frac{3}{30.2}$

$I = 0.099A$ ✓

3.3.3 $P = I^2R_1$
$P = 0.099^2 \times 10$✓
$P = 0.098W$✓

$P = I^2R_2$
$P = 0.099^2 \times 20$✓
$P = 0.196W$✓

(3 × 4) (12)
[20]

VRAAG 4

4.1 4.1.1

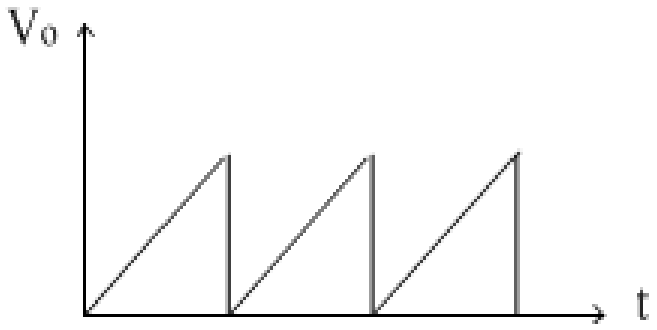

✓Kromme
✓Korrekte asbyskrifte
✓Toepassing: televisie-ontvangers, ossilloskope
(Enige toepaslike antwoord) (3)

4.1.2

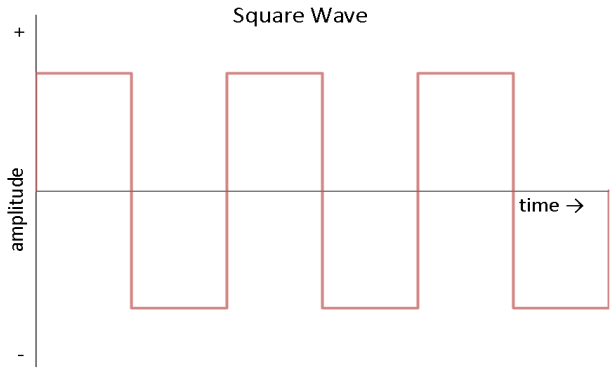

✓Kromme
✓Korrekte asbyskrifte
✓Toepassing: logikastroombaanwerk (rekenaars)
(Enige toepaslike antwoord) (3)

4.2 4.2.1 $a = \frac{N_1}{N_2} = \frac{10}{1} = 10:1$ (1)

4.2.2 $\frac{V_1}{V_2} = \frac{N_1}{N_2}$

$\frac{220}{V_2} = \frac{10}{1}$ ✓

$V_2 = \frac{220 \times 1}{10}$ ✓

$V_2 = 22V$ ✓ (3)

4.2.3 $\frac{N_1}{N_2} = \frac{I_2}{I_1}$ ✓

$\frac{10}{1} = \frac{I_2}{5}$ ✓

$I_2 = \frac{10\ x\ 2}{1}$ ✓

$I_2 = 20A$ ✓ (3)

4.3
- Gebrande wikkeling wat deur oormatige stroom veroorsaak word
- Kortsluiting tussen primêre en sekondêre wikkelings
- Oopkringwikkelings
- Wikkelings wat by die kern kortsluit
- Kortsluitings in langsliggende wikkelings (Enige 4 × 1) (4)

4.4 Wedersydse induksie is die induksie van spanning✓ in een geleier deur die magneetveld van 'n ander geleier.✓✓ (3)

[20]

VRAAG 5

5.1 5.1.1

$$C_T = \frac{C_1 \times C_2}{C_1 + C_2}$$
$$C_T = \frac{10 \times 12}{10 + 12} \checkmark$$
$$C_T = \frac{120}{22} \checkmark$$
$$C_T = 5.455\,\mu\text{f} \checkmark$$

$$Q_T = C_T V_T$$
$$Q_T = 5.455 \times 10^{-6}\, x\, 12 \checkmark$$
$$Q_T = 65.46\,\mu\text{C} \checkmark$$

OF

$$\frac{1}{C_T} = \frac{1}{C_1} + \frac{1}{C_2}$$
$$\frac{1}{C_T} = \frac{1}{10} + \frac{1}{12} \checkmark$$
$$\frac{1}{C_T} = \frac{6+5}{60} \checkmark$$
$$\frac{1}{C_T} = \frac{11}{60} \checkmark$$
$$C_T = 5.455\,\mu_{\text{f}} \checkmark$$

$$Q_T = C_T V_T$$
$$Q_T = 5.455 \times 10^{-6}\, x\, 12 \checkmark$$
$$Q_T = 65.46\,\mu\text{C} \checkmark$$

(5)

5.1.2

$$V_1 = \frac{Q_T}{C_1} = \frac{65.46}{10} \checkmark = 6.546V \checkmark$$

$$V_2 = \frac{Q_T}{C_2} = \frac{65.46}{12} \checkmark = 5.455V \checkmark$$

(4)

5.2 5.2.1 Parallel
5.2.2 Temperatuur
5.2.3 Vyf persent (5%)
5.2.4 Weerstand

(4 × 1) (4)

5.3

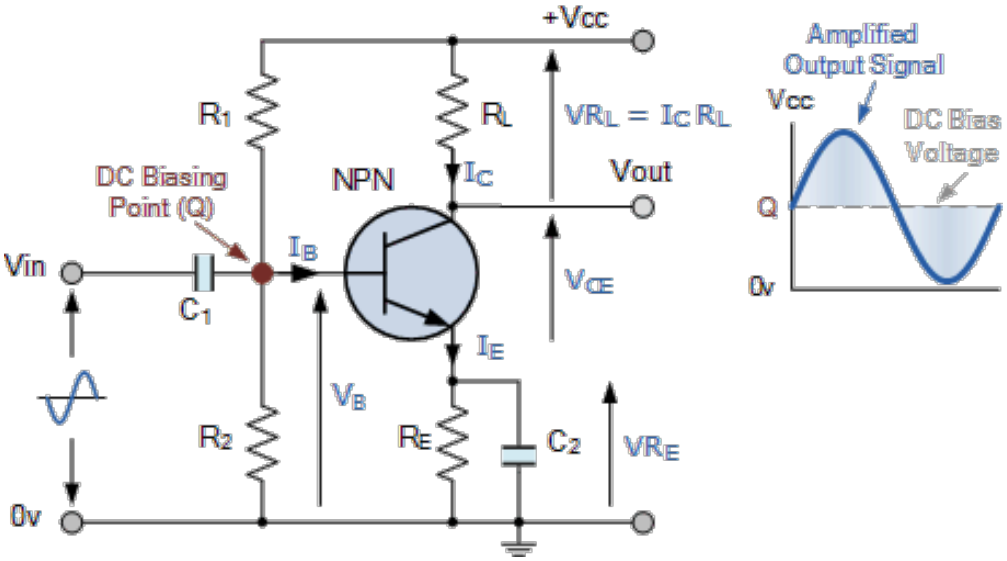

Korrekte inset- en leweringsgolfvorms = 1 punt elk
Korrekte transistor = 1 punt
Weerstand = ½ punt elk
Inset- en leweringskapasitors = ½ punt elk
Korrek gekoppelde Vcc = 1 punt
Totaal = 7 punte (7)
[20]

TOTAAL: 100

Kopiereg voorbehou