higher education & training

Department:
Higher Education and Training
REPUBLIC OF SOUTH AFRICA

MARKING GUIDELINE

NATIONAL CERTIFICATE

INDUSTRIAL ELECTRONICS N1

16 November 2022

This marking guideline consists of 8 pages.

Copyright reserved

QUESTION 1

1.1 1.1.1 F
1.1.2 E
1.1.3 B
1.1.4 A
1.1.5 D

(5 × 1) (5)

1.2 1.2.1 One
1.2.2 Positive
1.2.3 Five
1.2.4 10%
1.2.5 Intrinsic

(5 × 1) (5)

1.3
- Not rechargeable
- Become polarised when connected to a load
- Have a relatively short lifespan
- Provide small currents
- Must be removed from apparatus if not in use for extended periods (5)

1.4 1.4.1 Preset potentiometer
1.4.2 Zener diode
1.4.3 Battery
1.4.4 PNP transistor
1.4.5 Adjustable inductor

(5 × 1) (5)
[20]

Copyright reserved

QUESTION 2

2.1 2.1.1

$$R_P = \frac{R_3 \ x \ R_4}{R_3 + R_4} \checkmark$$

$$R_P = \frac{100 \ x \ 60}{100 \ + \ 60} \checkmark$$

$$R_P = \frac{6\,000}{160} \checkmark$$

$$R_P = 37{,}5\ \Omega \checkmark$$

$$R_T = R_P + R_1 + R_2 \checkmark$$
$$R_T = 37{,}5 + 40 + 50 \checkmark$$
$$R_T = 127{,}5\ \Omega \checkmark$$

OR

$$\frac{1}{R_P} = \frac{1}{R_3} + \frac{1}{R_4}$$

$$\frac{1}{R_P} = \frac{1}{100} + \frac{1}{60} \checkmark$$

$$\frac{1}{R_P} = \frac{6 + 10}{600} \checkmark$$

$$\frac{1}{R_P} = \frac{16}{600} \checkmark$$
$$R_P = 37{,}5\ \Omega \checkmark$$

$$R_P = R_P + R_1 + R_2 \checkmark$$
$$R_P = 37{,}5 + 40 + 50 \checkmark$$
$$R_P = 127{,}5\ \Omega \checkmark$$ (7)

2.1.2

$$I_T = \frac{V}{R_T} \checkmark$$
$$I_T = \frac{30}{127{,}5} \checkmark$$

$$I_T = 0{,}235\ A \checkmark$$ (3)

Copyright reserved

2.1.3 $V_P = I_T R_P$✓
$V_P = 0{,}235\ x\ 37{,}5$✓
$V_P = 8{,}813\ V$✓

OR

$V_P = \frac{R_P\ V_T}{R_T}$✓
$V_P = \frac{37{,}5\ x\ 30}{127{,}5}$✓
$V_P = 8{,}824\ V$✓ (3)

2.1.4
- Brown
- Black
- Brown
- Gold (4)

2.2
- Speakers
- Telephones
- Radio and television receivers (3)

[20]

QUESTION 3

3.1
3.1.1 Series
3.1.2 Current
3.1.3 Parallel
3.1.4 Voltage
3.1.5 Parallel
3.1.6 Resistance
(6 × 1) (6)

3.2
$A = \frac{\pi d^2}{4}$✓
$A = \frac{\pi(1{,}5\ x\ 10^{-3})^2}{4}$✓
$A = 1{,}767\ x\ 10^{-6} m^2$✓ (3)

3.3 $R_t = R_O(1 + \propto \Delta t)$✓
$R_t = 0{,}5\ (1 + 0{,}004\ x\ 25)$✓
$R_t = 0{,}55\ \Omega$✓ (3)

Copyright reserved

3.4 3.4.1

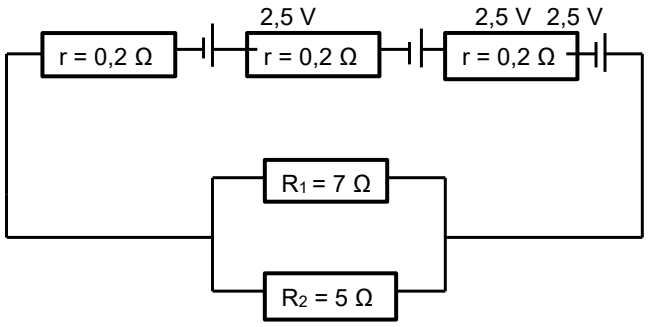

1 mark = labels
3 marks = correctness (to be allocated at marker's discretion) (4)

3.4.2 $R_T = \frac{R_1 \, x \, R_2}{R_1 + R_2}$

$R_T = \frac{7 \, x \, 5}{7 + 5}$

$R_T = 2{,}917\ \Omega$✓

$I = \frac{E}{R_T + r}$

$I = \frac{(2{,}5 \, x \, 4)}{2{,}917 + 0{,}8}$✓✓

$I = \frac{10}{3{,}717}$

$I = 2{,}69\ A$✓ (4)

[20]

QUESTION 4

4.1
- Eddy current losses
- Copper losses
- Hysteresis losses (3)

4.2 4.2.1 $a = \frac{N_1}{N_2} = \frac{1\,500}{500}$✓ $= 3:1$✓ (2)

4.2.2 $\frac{N_1}{N_2} = \frac{I_2}{I_1}$✓

$\frac{1\,500}{500} = \frac{I_2}{4}$✓

$I_2 = \frac{1\,500 \, x \, 4}{500}$✓

$I_2 = 12\ A$✓ (4)

Copyright reserved

4.3 Direct current is a current that always flows in one direction✓ of constant magnitude,✓ whereas alternating current is a current that rises to maximum and then falls to zero in one direction,✓ and then rises to maximum and falls to zero in the opposite direction.✓ (4)

4.4 The EMF induced is directly proportional✓ to the rate of change of flux✓ linking the coil or circuit✓ **OR** When a conductor moves through a magnetic field,✓✓ a voltage and current are induced in the conductor.✓ (3)

4.5
- The number of turns of the coil
- The cross-sectional area of the coil
- The length of the coil
- The permeability of the core material (4)

[20]

QUESTION 5

5.1 5.1.1 True
5.1.2 True
5.1.3 False
5.1.4 False
5.1.5 True
(5 × 1) (5)

5.2
- Rectification
- Protection
- Switch (Any 1 × 1) (1)

5.3 5.3.1 $C_T = C_1 + C_2 + C_3$✓
C_T = 10 + 20 + 35✓
$C_T = 65\ \mu f$✓ (3)

5.3.2 $Q_T = C_T V$✓
$Q_T = 65\ x\ 10^{-6}\ x\ 30$✓
$Q_T = 1\ 950\ \mu C$✓ (3)

Copyright reserved

5.4 5.4.1

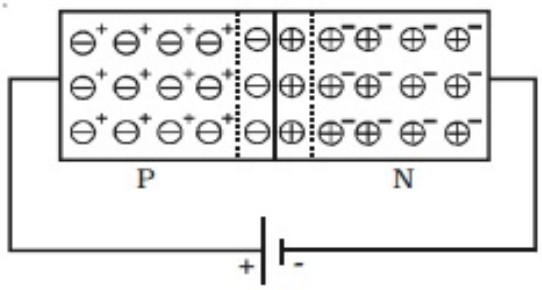

Fig Forward biased PN junction diode

1 mark = depletion region with correct width (narrow)
1 mark = battery with correct polarity
2 marks = correctly connected P-type and N-type layers (4)

5.4.2

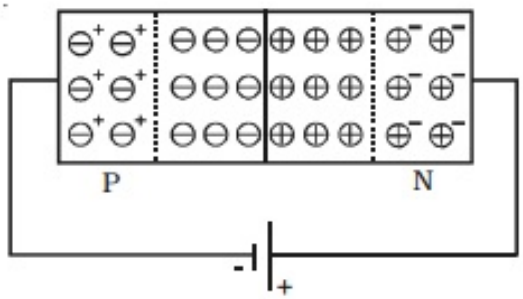

Fig Reverse biased PN junction diode.

1 mark = depletion region with correct width (wide)
1 mark = battery with correct polarity
2 marks = correctly connected P-type and N-type layers (4)
[20]

TOTAL: 100

Commented [L1]: Please change in the figures:
Forward-biased PN-junction diode
Revers-biased PN-junction diode [remove the full stop]

Copyright reserved