higher education & training

Department:
Higher Education and Training
REPUBLIC OF SOUTH AFRICA

NATIONAL CERTIFICATE

INDUSTRIAL ELECTRONICS N1

(8080641)

22 November 2023 (X-paper)
09:00–12:00

Drawing instruments and nonprogrammable calculators may be used.

This question paper consists of 6 pages and 1 formula sheet.

042Q1E2322

Copyright reserved

DEPARTMENT OF HIGHER EDUCATION AND TRAINING
REPUBLIC OF SOUTH AFRICA

NATIONAL CERTIFICATE
INDUSTRIAL ELECTRONICS N1
TIME: 3 HOURS
MARKS: 100

INSTRUCTIONS AND INFORMATION

1. Answer all the questions.
2. Read all the questions carefully.
3. Number the answers according to the numbering system used in this question paper.
4. Use the value of π as 3,142.
5. All final answers must be approximated accurately to THREE decimals.
6. Use only a black or a blue pen.
7. Write neatly and legibly.

Copyright reserved

QUESTION 1

1.1 Convert the following:

1.1.1 20 μF to nano-farads.

1.1.2 100 pF to nano-farads.

(2 × 1) (2)

1.2 Choose a term from COLUMN B that matches a description in COLUMN A. Write only the letter (A–J) next to the question number (1.2.1–1.2.10) in the ANSWER BOOK.

COLUMN A		COLUMN B	
1.2.1	Mainly used in reverse bias	A	light emitting diode
1.2.2	Conducts in forward bias	B	valency shell
1.2.3	Conducts when incident light falls upon it	C	bipolar junction transistor
1.2.4	Voltage controlled variable capacitance	D	inductor
1.2.5	Radiates light energy	E	Zener diode
1.2.6	Consists of two PN junctions	F	conductor
1.2.7	Stores energy in the form of an electromagnetic field	G	photo diode
1.2.8	A material which has many free electrons	H	ionisation
1.2.9	Process of losing or gaining electrons	I	varactor diode
1.2.10	The outermost shell of an atom	J	PN-junction

(10 × 1) (10)

1.3 Name FOUR advantages of digital meters. (4)

1.4 State FOUR properties of electromagnetic induction. (4)

[20]

QUESTION 2

Refer to FIGURE 1 below and determine the following:

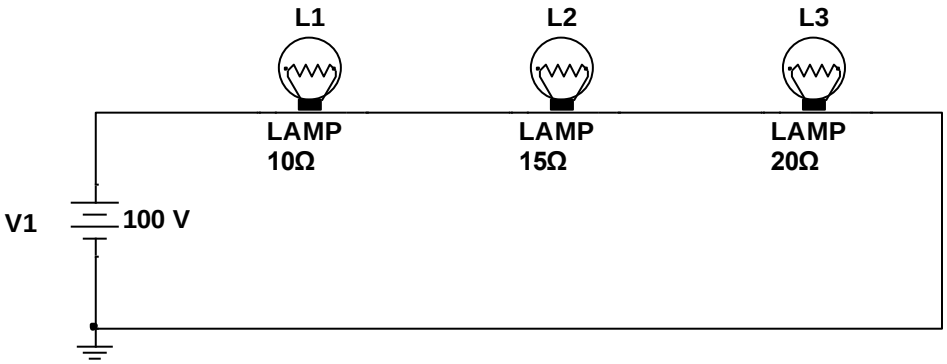

FIGURE 1

2.1 The ammeter reading if an ammeter is connected in series with the lamps. (6)

2.2 The readings on all the voltmeters if a voltmeter is connected across each lamp. (6)

2.3 The total power across the first two lamps (L1 and L2). (4)

2.4 If L1 is to be replaced with a resistor of 470 Ω with a 10% tolerance,

Determine the colour coding. (4)

[20]

QUESTION 3

3.1 Units of measurements are globally recognised and are very important in sharing electrical engineering information around the world.

Give the units of measurement in which the following are measured:

3.1.1 Temperature coefficient of resistance

3.1.2 Resistivity

3.1.3 Frequency

3.1.4 Electromotive force

3.1.5 Inductance

(5 × 1) (5)

3.2 A copper conductor with a resistance of 1,73 Ω has an area of 10×10^{-6} m^2.

How long is the conductor if it has a resistivity of $0{,}0173 \times 10^{-6}$ Ω.m? (3)

Copyright reserved

3.3 A circuit consists of two cells each with an EMF of 1,5 V and an internal resistance of 0,1 Ω, connected in series. The circuit is completed by connecting two resistors of 10 Ω and 20 Ω respectively in series.

3.3.1 Draw a neat, labelled circuit diagram.

3.3.2 Calculate the total current flowing through the circuit.

3.3.3 Calculate the power across each of the external resistors.

(3 × 4) (12)
[20]

QUESTION 4

4.1 Draw a neat, labelled diagram of each of the following waveforms and name ONE application of each.

4.1.1 Saw-tooth wave

4.1.2 Square wave

(2 × 3) (6)

4.2 Refer to FIGURE 2 below and determine the following:

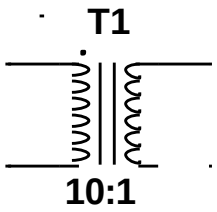

FIGURE 2

4.2.1 The turns ratio. (1)

4.2.2 The secondary voltage, if the transformer is supplied from a 220 V supply. (3)

4.2.3 The secondary current if the primary current is 2 A. (3)

4.3 Name FOUR faults that can occur in a transformer. (4)

4.4 Briefly explain the term, *mutual induction*. (3)
[20]

Copyright reserved

QUESTION 5

5.1 Two capacitors, C_1 and C_2, with values of $10\,\mu F$ and $12\,\mu F$ respectively, are connected in series. The circuit is connected across a 12 V supply.

Calculate the following:

5.1.1 The total charge. (5)

5.1.2 The voltage across each capacitor. (4)

5.2 Complete the following sentences by filling the missing word or words. Write only the answer next to the question number (5.2.1–5.2.4) in the ANSWER BOOK.

5.2.1 An ohm meter must always be connected in …

5.2.2 Thermistors are mainly used for … measurements.

5.2.3 The colour gold on a resistor colour coding represents … tolerance.

5.2.4 The larger the cross sectional area of a conductor, the lesser the … (4 × 1) (4)

5.3 Draw a neat, labelled circuit diagram of a common emitter amplifier which uses an NPN transistor. Show the input and output waveforms. (7)

[20]

TOTAL: 100

Copyright reserved

INDUSTRIAL ELECTRONICS N1

FORMULA SHEET

$$V = I \times R$$

$$P = \frac{V^2}{R}$$

$$P = I^2 R$$

$$P = V \times I$$

$$I = \frac{E}{R + r}$$

$$Q = C \times V$$

$$R = \frac{\rho \ell}{A}$$

$$R_t = R_o(1 + \alpha_o \Delta t)$$

$$R_t = R_1 + R_2 + R_3 ..... R_n$$

$$C_t = C_1 + C_2 + C_3 ..... C_n$$

$$L_t = L_1 + L_2 + L_3 ..... L_n$$

$$\frac{1}{C_t} = \frac{1}{C_1} + \frac{1}{C_2} + \frac{1}{C_3} ..... \frac{1}{C_n}$$

$$\frac{1}{R_t} = \frac{1}{R_1} + \frac{1}{R_2} + \frac{1}{R_3} ..... \frac{1}{R_n}$$

$$\frac{1}{L_t} = \frac{1}{L_1} + \frac{1}{L_2} + \frac{1}{L_3} ..... \frac{1}{L_n}$$

$$\frac{V_p}{V_s} = \frac{N_p}{N_s} = \frac{I_s}{I_p}$$

Copyright reserved