higher education & training

Department:
Higher Education and Training
REPUBLIC OF SOUTH AFRICA

NATIONAL CERTIFICATE

FITTING AND MACHINING THEORY N1

(11021871)

22 November 2022 (X-paper)
09:00–12:00

Drawing instruments and nonprogrammable calculators may be used.

This question paper consists of 7 pages and 1 formula sheet.

130Q1E2222

Copyright reserved

DEPARTMENT OF HIGHER EDUCATION AND TRAINING
REPUBLIC OF SOUTH AFRICA

NATIONAL CERTIFICATE
FITTING AND MACHINING THEORY N1
TIME: 3 HOURS
MARKS: 100

INSTRUCTIONS AND INFORMATION

1. Answer all the questions.
2. Read all the questions carefully.
3. Number the answers according to the numbering system used in this question paper.
4. Start each section on a new page.
5. Use only a blue or black pen.
6. Write neatly and legibly.

Copyright reserved

SECTION A: GENERAL PRACTICE

QUESTION 1: OCCUPATIONAL SAFETY

1.1 There are regulations with regard to certain situations that the user must report to an inspector.

1.1.1 State THREE regulations regarding machinery failure. (3)

1.1.2 State TWO regulations regarding illumination of machinery. (2)
[5]

QUESTION 2: MEASURING INSTRUMENTS

2.1 FIGURE 1 shows a diagram of a measuring instrument. Answer QUESTIONS (1.1.1–1.1.4) with regard to the diagram in FIGURE 1.

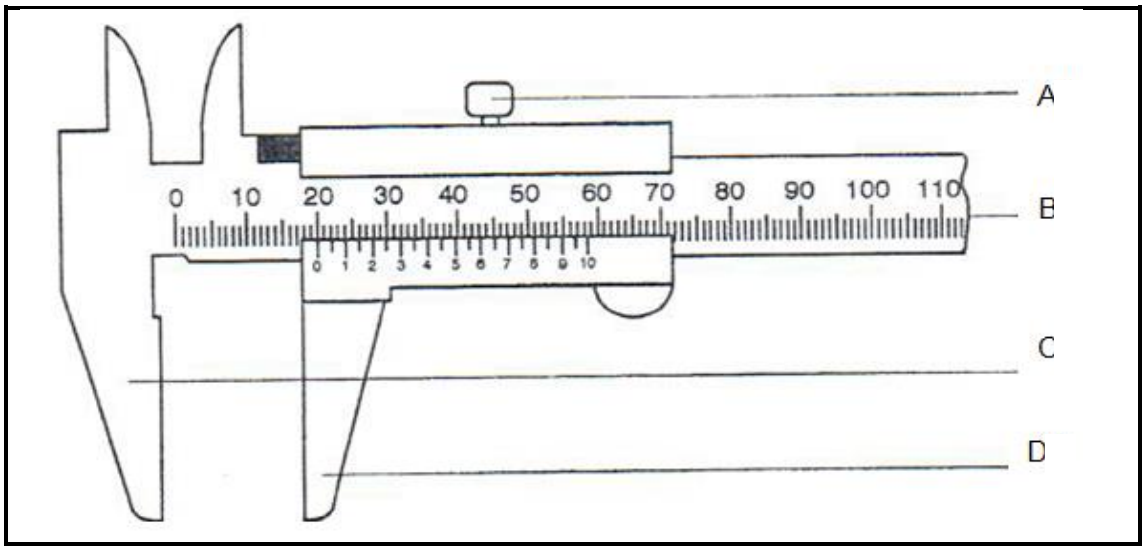

FIGURE 1

2.1.1 What is the name of the measuring instrument shown in FIGURE 1? (1)

2.1.2 Name part A indicated on the diagram. (1)

2.1.3 Name parts C and D indicated on the diagram. (2)

2.1.4 Explain how you would use this instrument to measure the thickness of a shaft. (4)

2.2 Which instrument would you use to measure the small gap between spark plugs? (1)

2.3 Name TWO advantages of using a digital instrument. (2)
[11]

Copyright reserved

QUESTION 3: SCREW THREADS

3.1 State TWO advantages of the following screw threads:

3.1.1 Square screw thread

3.1.2 Acme screw thread

(2 × 2) (4)

3.2 Calculate the depth of a 70 mm metric screw thread with a pitch of 4,5 mm. (2)

[6]

QUESTION 4: HAND TOOLS

4.1 Punches assist in different ways in the workshop.

Name FOUR types of punches. (4)

4.2 Name TWO types of screwdriver heads. (2)

[6]

QUESTION 5: METALS AND PLASTICS

5.1 Heat-treatment processes change the physical properties of a metal.

Explain the purpose of the following processes applied to steel:

5.1.1 Tempering

5.1.2 Annealing

(2 × 2) (4)

5.2 Nonferrous metals do not contain any iron.

State TWO properties of each of the following nonferrous metals:

5.2.1 Copper

5.2.2 Zinc

5.2.3 Lead

(3 × 2) (6)

5.3 Name TWO uses of grey cast iron. (2)

[12]

Copyright reserved

QUESTION 6: MARKING-OFF

6.1 State TWO uses of jenny callipers. (2)

6.2 State THREE differences in use between a *dotting punch* and a *centre punch*. (3)
[5]

QUESTION 7: KEYS AND KEYWAYS

7.1 Name TWO uses of a key in industry. (2)

7.2 An 80 mm shaft has to be fitted with a feather key.

Calculate the height and width of the key. (4)
[6]

QUESTION 8: FASTENERS

8.1 Fasteners can be fixed together permanently or temporarily.

Name TWO ways of permanently fixing components together.

8.2 Name TWO functions of circlips.

(2 × 2) **[4]**

QUESTION 9: HAND TAPS, STOCKS, DIES AND REAMERS

9.1 Name ONE purpose of a hand reamer. (1)

9.2 Name FOUR thread-cutting faults. (4)
[5]

TOTAL SECTION A: 60

Copyright reserved

SECTION B

QUESTION 10: DRILLING MACHINES

10.1 The cutting speed of mild steel is 24 metres per minute and the machine runs at 293 revolutions per minute.

Determine the drill diameter that should be used. (4)

10.2 FIGURE 2 shows a pillar-type drilling machine. Name the component parts indicated by writing only the answer next to the question number (10.2.1-10.2.6) in the ANSWER BOOK.

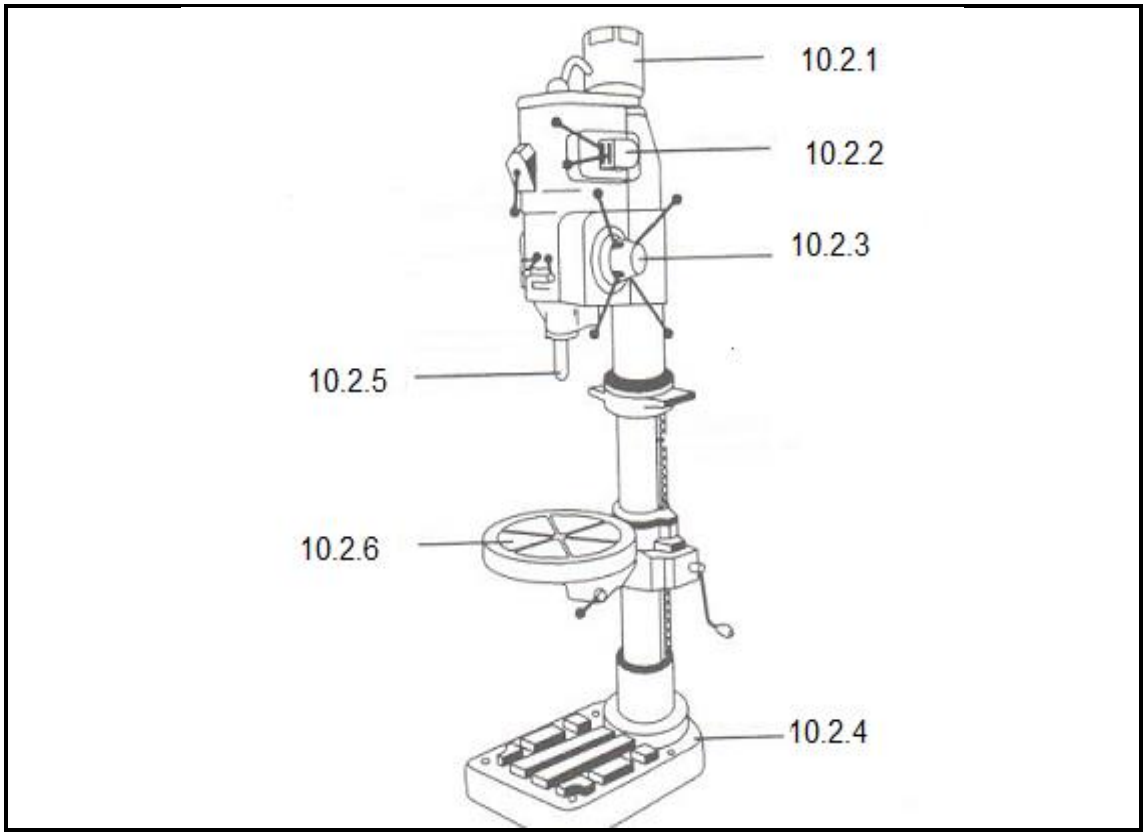

FIGURE 2 (6)

[10]

QUESTION 11: GRINDING MACHINES AND MACHINE CUTTING TOOLS

11.1 State the purpose of a left-hand screw thread and a right-hand screw thread on the spindle of a bench grinding machine. (2)

11.2 State TWO functions of compressible washers. (2)

11.3 Name TWO types of grinding wheel dressers. (2)

11.4 Name FOUR general rules for selecting a grinding wheel. (4)

[10]

Copyright reserved

QUESTION 12: CENTRE LATHE

12.1 FIGURE 3 shows a diagram of a section of a tailstock. Name the parts indicated by writing only the answer next to the question number (12.1.1-12.1.5) in the ANSWER BOOK.

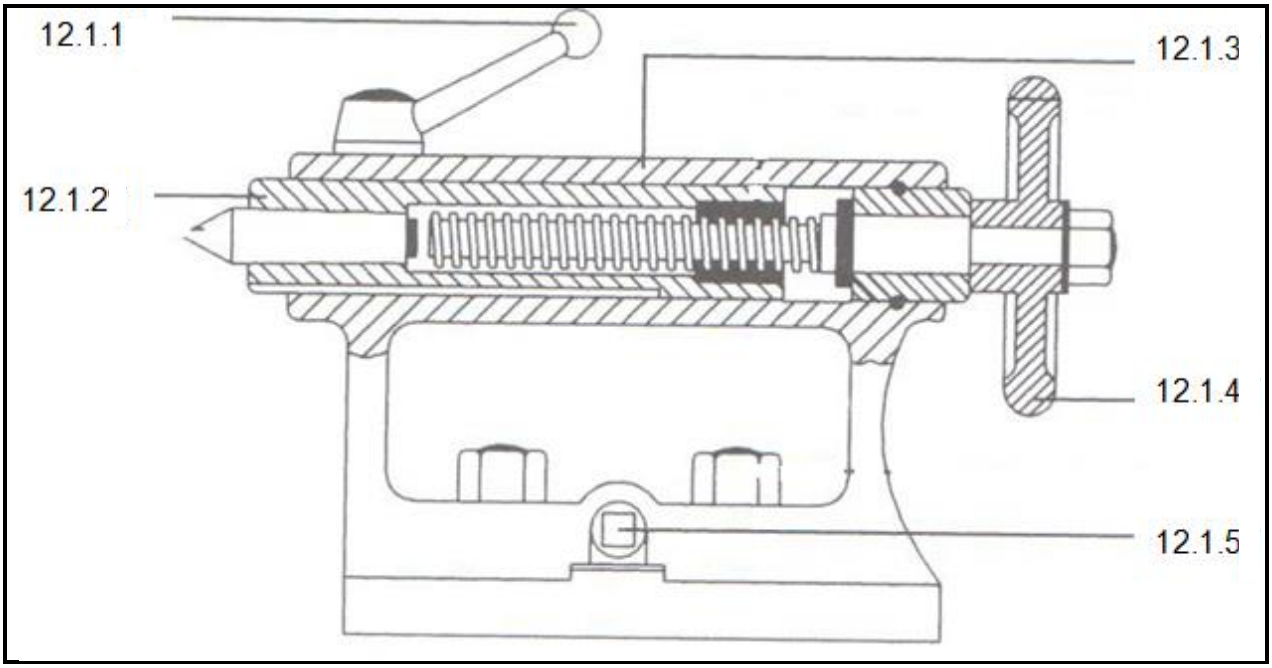

FIGURE 3 (5)

12.2 State THREE methods of taper turning that can be done on a lathe. (3)

12.3 Name TWO uses of a lathe steady. (2)
[10]

QUESTION 13: MILLING MACHINE

13.1 The milling machine is a versatile machine.

State SIX safety precautions to consider when using a milling machine. (6)

13.2 State TWO purposes for which the index or dividing head is used. (2)

13.3 Name TWO methods of indexing that can be used. (2)
[10]

TOTAL SECTION B: 40
GRAND TOTAL: 100

Copyright reserved

FITTING AND MACHINING THEORY N1

FORMULA SHEET

Any applicable formula may also be used.

1. $V = \pi \times D \times N$

2. $w = feed/stroke \times strokes/min \times t$

3. $Strokes/min = \frac{S}{Length\ of\ \ stroke} \times Ratio$

4. $h = \frac{D}{6}$

5. $w = \frac{D}{4}$

6. $Depth\ (D) = 0{,}613 \times P$

Copyright reserved