higher education & training

Department:
Higher Education and Training
REPUBLIC OF SOUTH AFRICA

NATIONAL CERTIFICATE

FITTING AND MACHINING THEORY N1

(11021871)

28 November 2023 (X-paper)
09:00–12:00

Drawing instruments and nonprogrammable calculators may be used.

This question paper consists of 8 pages and 1 formula sheet.

128Q1E2328

Copyright reserved

DEPARTMENT OF HIGHER EDUCATION AND TRAINING
REPUBLIC OF SOUTH AFRICA

NATIONAL CERTIFICATE
FITTING AND MACHINING THEORY N1
TIME: 3 HOURS
MARKS: 100

INSTRUCTIONS AND INFORMATION

1. Answer all the questions in SECTION A and SECTION B.
2. Read all the questions carefully.
3. Number the answers according to the numbering system used in this question paper.
4. All sketches must be neat, reasonably large and in good proportion.
5. Label all sketches.
6. Write neatly and legibly.

Copyright reserved

SECTION A: GENERAL PRACTICE

QUESTION 1: OCCUPATIONAL SAFETY

List FIVE general safety measures to remember when using hand tools. **[5]**

QUESTION 2: MEASURING INSTRUMENTS

2.1 A feeler gauge is used to measure small gaps between surfaces.

Name FOUR places where a feeler gauge may be used. (4)

2.2 Name THREE uses of a vernier height gauge. (3)

2.3 What is a telescopic gauge used for? (2)

2.4 Name TWO types of dial test indicators. (2)
[11]

QUESTION 3: SCREW THREADS

3.1 Name TWO instances where an Acme screw thread is used. (2)

3.2 Explain the difference between a *single start screw thread* and a *multi start screw thread*. (2)

3.3 Calculate the depth of a 50 mm metric screw thread with a pitch of 2,54 mm. (2)
[6]

QUESTION 4: HAND TOOLS

4.1 The heads of soft-faced hammers are made from softer materials than ordinary hammers.

Name TWO types of materials that are used to manufacture heads of soft-faced hammers. (2)

4.2 Name TWO uses for each of the following files.

4.2.1 Half round file

4.2.2 Triangular file

(2 × 2) (4)
[6]

QUESTION 5: METALS AND PLASTICS

5.1 All steels are supplied with different colour codes to identify them. Name the types of metals with the following colours.

5.1.1 Grey

5.1.2 Black

5.1.3 Brown

5.1.4 Red

(4 × 1) (4)

5.2 Nylon is a plastic which is often used as a substitute for steel.

Name FOUR uses of nylon. (4)

5.3 Metals have different properties which make them suitable for particular purposes. For example, hardness is the ability to resist wear, scratching and denting.

What are the names of the following properties of metals:

5.3.1 The ability of a metal to return to its original state after a load has been removed

5.3.2 The ability to withstand being extended in all directions by means of hammering or rolling

5.3.3 The tendency to snap off or crumble when a sudden load is applied

5.3.4 The ability to absorb large amounts of energy without physical deterioration

(4 × 1) (4)
[12]

QUESTION 6: MARKING OFF

6.1 A combination set is a versatile tool used by fitters.

List THREE uses of a square and blade. (3)

6.2 What is a measuring tape used for? (2)
[5]

QUESTION 7: KEYS AND KEYWAYS

7.1	Why is a Woodruff key semi-circular in shape?	(2)
7.2	A shaft with a nominal diameter of 90 mm must be fitted with a feather key. Calculate the height and width of the key.	(4) **[6]**

QUESTION 8: FASTENERS

8.1	Name THREE types of screws that cut their own thread.	(3)
8.2	Name ONE type of positive locking nut.	(1) **[4]**

QUESTION 9: HAND TAPS, STOCKS, DIES AND REAMERS

9.1	Name the TWO types of tap wrenches that can be used to fit onto the shank of a tap to cut a thread.	(2)
9.2	Explain what the process of reaming a hole entails.	(1)
9.3	Explain why one would ream a drilled hole.	(2) **[5]**

TOTAL SECTION A: 60

SECTION B

QUESTION 10: DRILLING MACHINES

NOTE: Answer all FOUR questions from this section.

10.1 If the cutting speed for mild steel is 44 metres per minute and the machine runs at 280 revolutions per minute, determine the drill diameter that should be used. (4)

10.2 Give TWO reasons each for the following twist drill faults that may occur.

10.2.1 Tang breakage

10.2.2 Chipped cutting lips

10.2.3 Hole larger than drill

(3 × 2) (6)
[10]

QUESTION 11: GRINDING MACHINES AND MACHINE CUTTING TOOLS

11.1 Every grinding job is different. Therefore, certain factors should be consider when choosing the type of wheel for the job.

List FIVE important factors to consider when selecting a grinding wheel. (5)

11.2 Compressible washers, also called blotters, are placed on both sides of the wheel.

Give THREE purposes of compressible washers. (3)

11.3 Explain the purpose of the following functions of grinding wheel dressers:

11.3.1 Truing a wheel

11.3.2 Dressing a wheel

(2 × 1) (2)
[10]

QUESTION 12: CENTRE LATHE

12.1 A computerised numerical control lathe is commonly called a CNC lathe.

List FIVE differences between a *CNC lathe* and a *centre lathe*. (5)

12.2 When machining irregular work-pieces on a lathe it is necessary to use a face plate. FIGURE 5 depicts a bearing set-up on a face plate for boring. Name the components by writing only the answer next to the question number (12.2.1–12.2.5) in the ANSWER BOOK

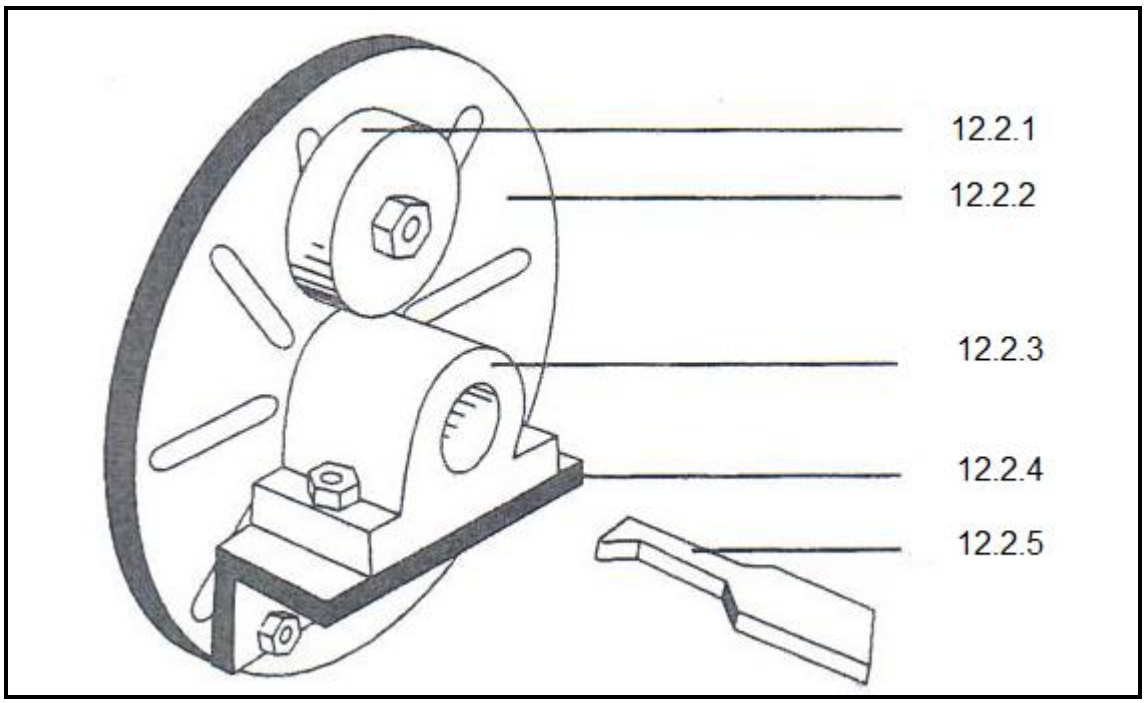

FIGURE 5

(5 × 1) (5)
[10]

QUESTION 13: MILLING MACHINE

13.1 Describe the function of the following milling machine parts:

13.1.1 Arbor support

13.1.2 Column

(2 × 1) (2)

13.2 FIGURE 6 depicts an image of a milling machine. Name the components by writing only the answer next to the question number (13.2.1–13.2.8) in the ANSWER BOOK.

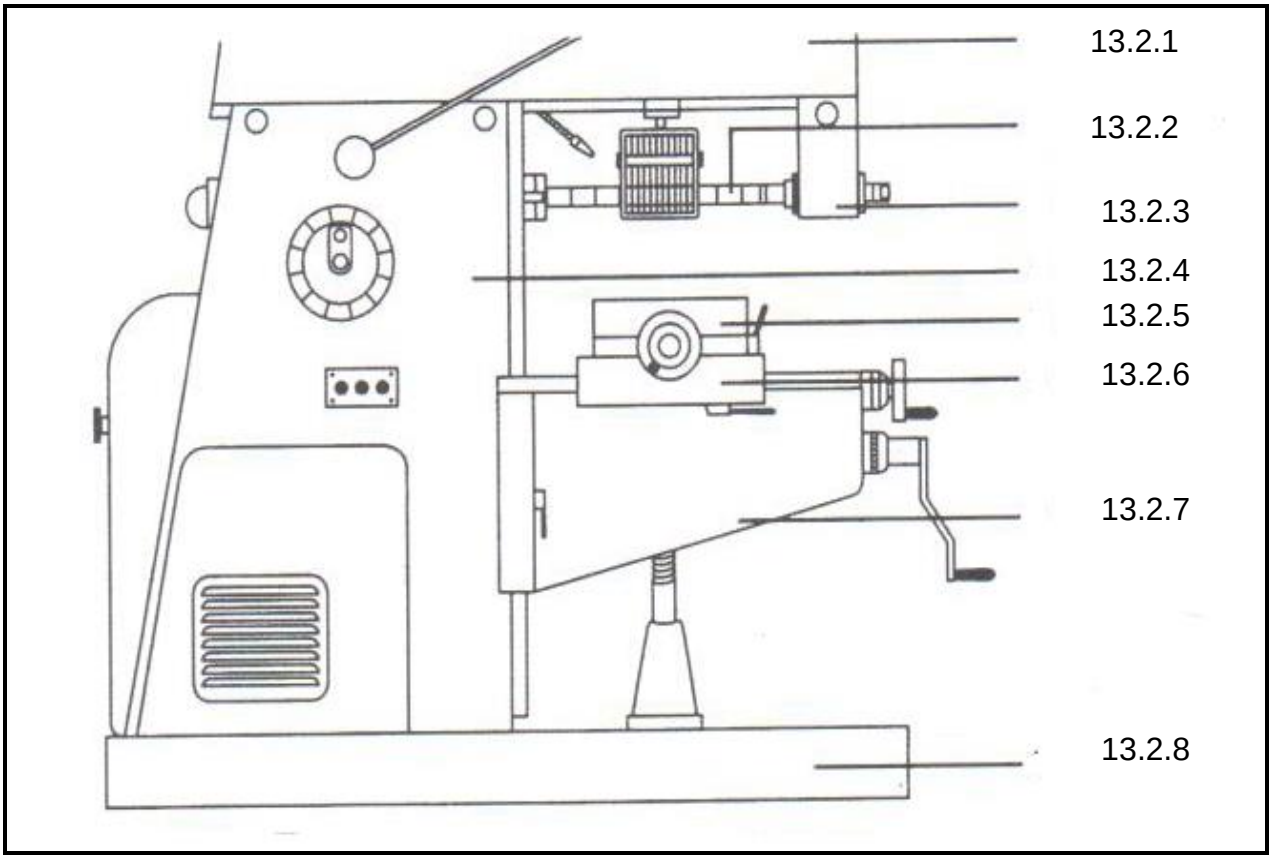

FIGURE 6

(8 × 1) (8)
[10]

TOTAL SECTION B: 40
GRAND TOTAL: 100

Copyright reserved

FITTING AND MACHINING THEORY N1

FORMULA SHEET

Any applicable formula may also be used.

1. $V = \pi \times D \times N$

2. *w = feed/stroke × strokes/min × t*

3. *Strokes/min =* $\frac{S}{length\ of\ \ stroke}$ *× ratio*

4. $h = \frac{D}{6}$

5. $w = \frac{D}{4}$

6. *Depth (d) = 0,613 × P*

Copyright reserved