higher education & training

Department:
Higher Education and Training
REPUBLIC OF SOUTH AFRICA

MARKING GUIDELINE

NATIONAL CERTIFICATE

ENGINEERING SCIENCE N1

1 December 2023

This marking guideline consists of 7 pages.

Copyright reserved

QUESTION 1

1.1 1.1.1 Scalar
1.1.2 Scalar
1.1.3 Vector
1.1.4 Vector
(4 × 1) (4)

1.2 Distance = 3,3 + 2,1 + 1✓
= 6,4 km NW✓ (2)

1.3 1.3.1 False
1.3.2 True
1.3.3 True
1.3.4 True
1.3.5 True
(5 × 1) (5)

1.4 Speed = s/t
= 90 000/3600✓
= 25 m/s✓ (2)

1.5 F = mg
F = 4,2 × 9,8
F = 41,16 N✓ (1)
[14]

QUESTION 2

2.1 When three forces are in equilibrium✓ they can be represented by the sides of a triangle in size and direction.✓ (2)

2.2 The tendency of a force to cause✓ or change the rotational motion of a body.✓ (2)

2.3

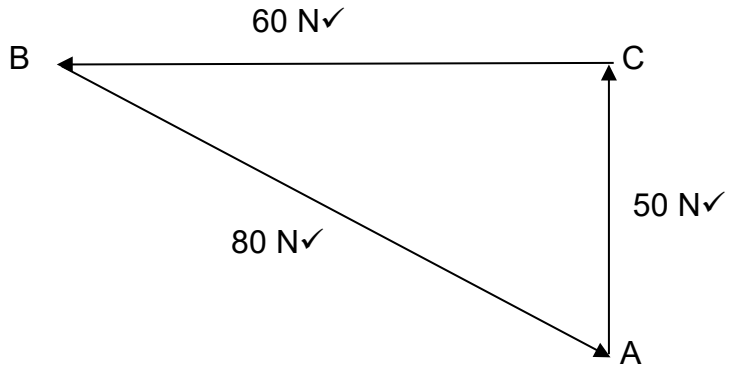

OR

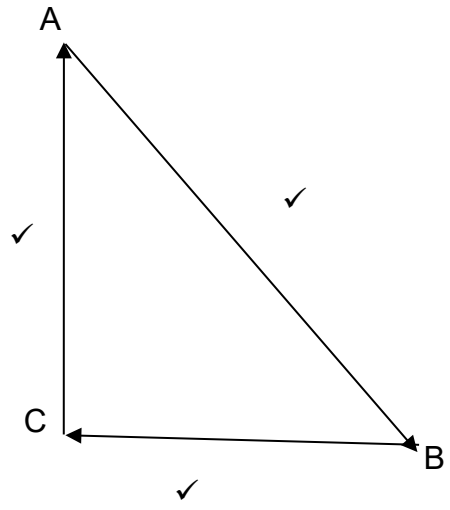

(3)

2.4 T = F.r
= 50 × 0,4✓
= 20 N.m✓ (2)

2.5 2.5.1 MA= W / F
= 230 × 9,8 / 445✓
= 5,065✓

2.5.2 VR = $\frac{\text{effort distance}}{\text{load distance}}$
= 4 / 0,33✓
= 12,121✓

(2 × 2) (4)

2.6 It states that a system of forces is in equilibrium if the sum of the anti-clockwise✓ moment about the fulcrum is equal to the sum of the clockwise moment about the fulcrum.✓ (2)

[15]

QUESTION 3

3.1 Input power (1)

3.2 A force✓ must be applied over a distance✓ (2)

3.3 Energy is an ability of a body to do work (1)

3.4 Power is the rate at which work is done✓ or work done per second (1)

3.5 3.5.1 W = F.S
W = (4400 × 9,8) × 250✓
W = 10780 kJ✓✓ (3)

3.5.2 P = W/ t
P = 10780000/ (6 × 60) ✓
P = 29,944 kW✓ (2)

3.6
- A circular saw rotating fast
- A grinding wheel running fast
- A bullet from a gun moving fast
- A stream of water flowing fast
- A vehicle moving fast

(Any 4 × 1) (4)

[14]

QUESTION 4

4.1 Heat is transferred from the warm cup of coffee to the ice cubes✓ until they both have same temperature.✓ (2)

4.2 When different metals are connected at the one end and heated✓ there will be a potential difference measured at the other end.✓ (2)

4.3

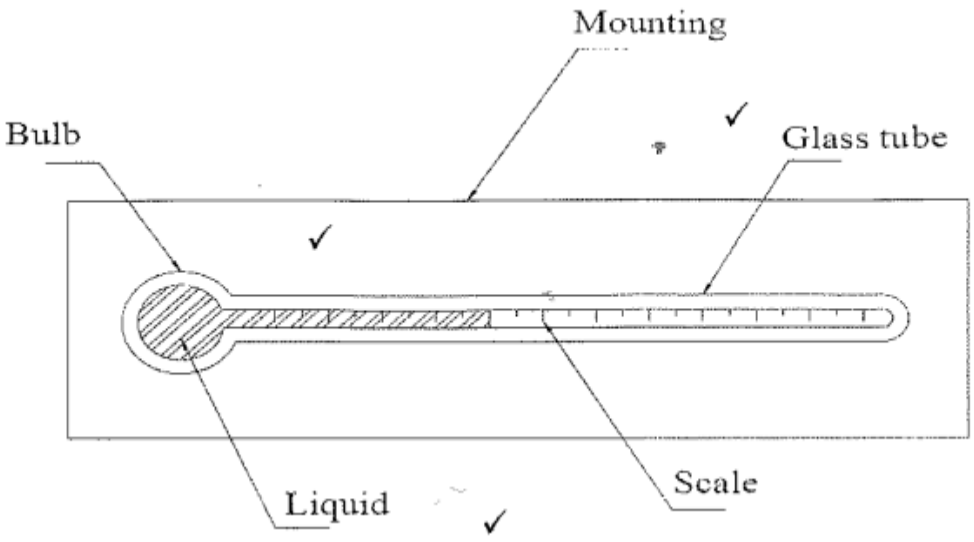

(Any 3 labels) (3)

4.4 $Q = m.c.\ \Delta t$
$Q = 5 \times 486 \times (35-(-2))$ ✓
$= 89910$ J✓ (2)

4.5 4.5.1 $\Delta t = t_f - t_0$
$= 95 - 2$✓
$= 93\ ^{\circ}C$✓

4.5.2 $L_f = l_0 + \Delta l$
$= 22 + 0.03$✓
$= 22{,}03$ m✓

(2 × 2) (4)

4.6
- Expand evenly
- Good conductor of heat
- Has a high boiling point
- Does not stick to the side of the glass tube
- Has a quick response to temperature changes (Any 3 × 1) (3)

4.7 Specific heat capacity is the amount of heat energy that 1 kg of a substance✓ absorbs to increase its temperature by 1 °C (or Kelvin).✓ (2)

[18]

QUESTION 5

5.1 5.1.1 Condensation

5.1.2 Liquid

5.1.3 Melting

(3 × 1) (3)

5.2 Is the smallest part into which a given substance can be divided without changing it identity. (1)

5.3
- Has a definite mass, but it's volume and shape change to fill the container in which it is trapped
- The particles are much further apart
- The movement of particles are very fast (3)

5.4 Is a process in which an atom loses or gains an electron. (1)

5.5
- Liquid
- Solid
- Gas (3)

5.6

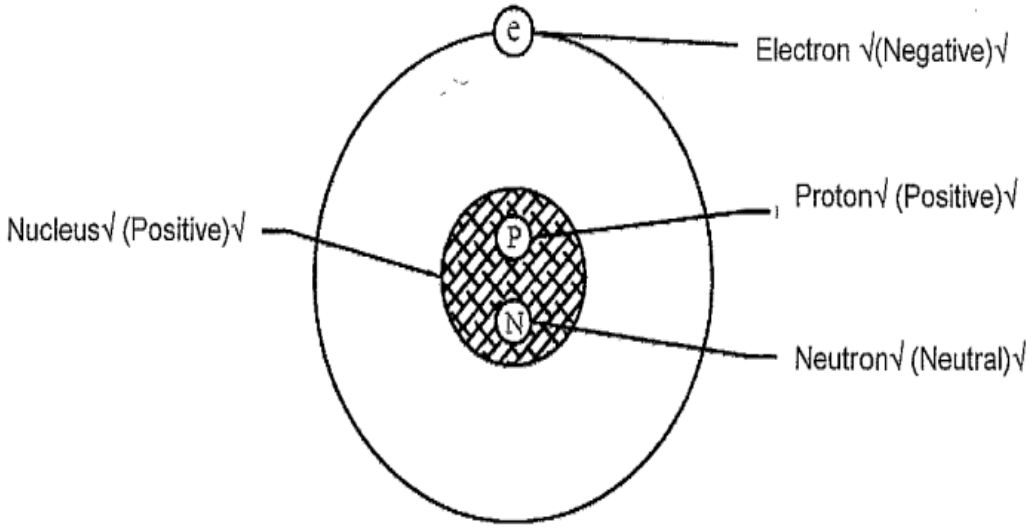

(Any 3 × 1) (3)
[14]

QUESTION 6

6.1 Ohm's law states that the current flowing in the circuit is directly proportional to the voltage✓ and inversely proportional to the resistance.✓ (2)

6.2 Insulator is a material that does not allow✓ current to flow✓ through it. (2)

6.3 A conductor is a material that allows current✓ to flow✓ through it. (2)

6.4 6.4.1 $R_t = R_1 + R_2 + R_3$
$= 7 + 8 + 9$✓
$= 24\ \Omega$✓ (2)

6.4.2 $I = V / R$
$= 12 / 24$✓
$= 0,5$ A✓ (2)

6.4.3 $P = V.\ I$
$= 12 \times 0,5$✓
$= 6$ W✓ (2)

6.4.4 $V = I.R$
$= 0,5 \times 6$✓
$= 3$ V✓ (2)

6.4.5 $V = I.R$
$= 0,5 \times 7$✓
$= 3,5$ V✓ (2)

6.4.6 $V = I.R$
$= 0,5 \times 8$✓
$= 4$ V✓ (2)

6.4.7 $E = I^2 R.t$
$= (0,5)^2 \times 8 \times (2 \times 60)$ ✓
$= 240$ J✓✓ (3)

6.5
- Current
- Time
- Resistance (Any 2 × 1) (2)

6.6 Temperature increases✓ – resistance increases✓ (2)
[25]

TOTAL: 100

Copyright reserved