higher education & training

Department:
Higher Education and Training
REPUBLIC OF SOUTH AFRICA

NATIONAL CERTIFICATE

ENGINEERING DRAWING N1

(8090261)

15 November 2022 (X-paper)
09:00–13:00

Requirements: A2 drawing sheet.

Drawing instruments may be used.

This question paper consists of 9 pages.

024Q1E2215

Copyright reserved

DEPARTMENT OF HIGHER EDUCATION AND TRAINING
REPUBLIC OF SOUTH AFRICA

NATIONAL CERTIFICATE
ENGINEERING DRAWING N1
TIME: 4 HOURS
MARKS: 100

INSTRUCTIONS AND INFORMATION

1. Answer all the questions.
2. Read all the questions carefully.
3. Number the answers according to the numbering system used in this question paper.
4. Use both sides of the DRAWING SHEET.
5. Draw a 15 mm border on both sides of the DRAWING SHEET.
6. Only the candidate information on the DRAWING SHEET may be done in pen. ALL other drawing work must be done in PENCIL.
7. All drawing work must conform to the latest SANS 10111 Code of Practice for Engineering Drawing.
8. Work neatly and legibly.

Copyright reserved

QUESTION 1: GENERAL ENGINEERING TERMS

1.1 Neatly copy the ANSWER BLOCK in FIGURE 1 on the DRAWING SHEET. (1)

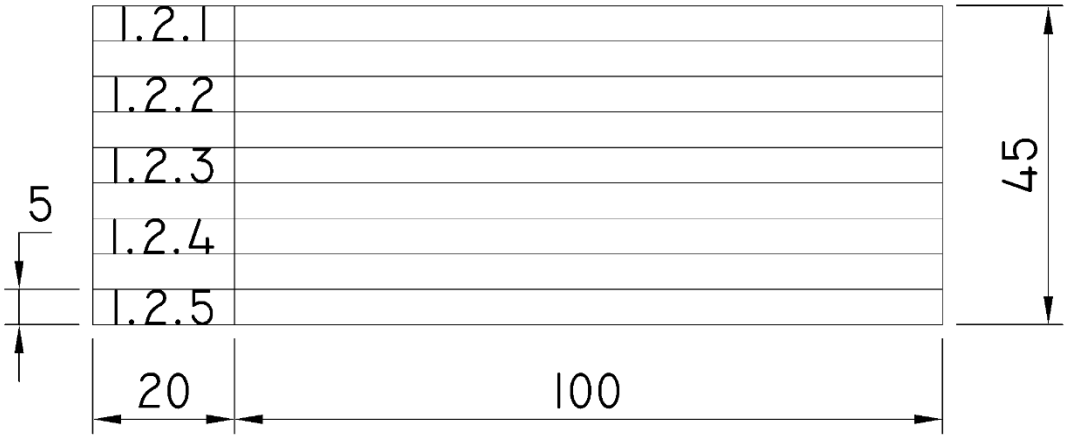

FIGURE 1

1.2 Various options are given as possible answers to the following questions. Choose the answer and write only the letter (A–D) next to the question number (1.2.1–1.2.5) in the ANSWER BLOCK on the DRAWING SHEET.

1.2.1 Which ONE of the following is not an instrument used in engineering drawing?

A The divider
B The stencils
C The flexible and French curves
D None of the above

1.2.2 Which ONE of the following methods is the correct way to print the letter Z on a drawing?

A	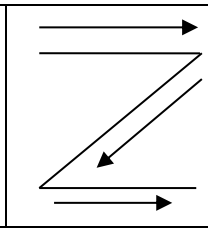	B	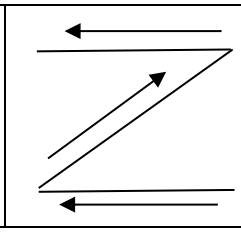	C	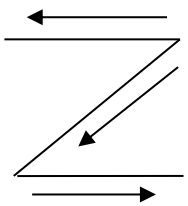	D	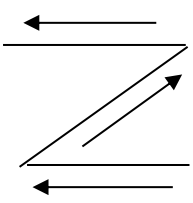

1.2.3 Which ONE of the following devices serves as an input device?

A Printer
B Monitor
C Keyboard
D Plotter

1.2.4 Which ONE of the following orthographic symbols correctly indicates first-angle orthographic projection?

A 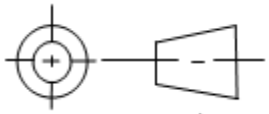

B 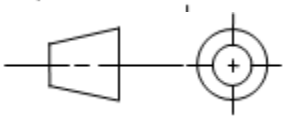

C 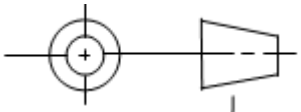

D 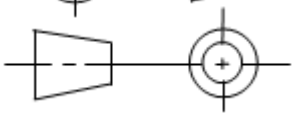

1.2.5 An abbreviation for the word DRAWING is …

A DRWNG
B DRNG
C DRG
D DRWN

(5 × 1) (5)

[6]

QUESTION 2: FREEHAND DRAWING

FIGURE 1 below shows a view of a shifting spanner.

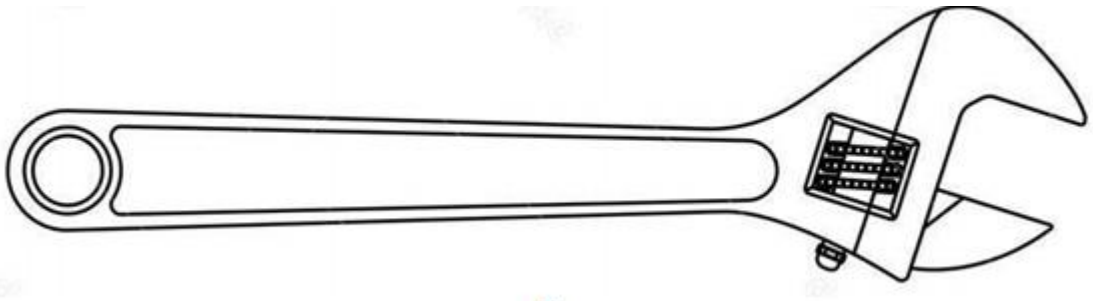

FIGURE 1

Use only a pencil and an eraser to make a freehand drawing of the view of the shifting spanner in good proportion TWICE the given size. **[10]**

QUESTION 3: GEOMETRICAL CONSTRUCTION/REPRODUCTION DRAWING

FIGURE 2 below shows the view of a cover plate.

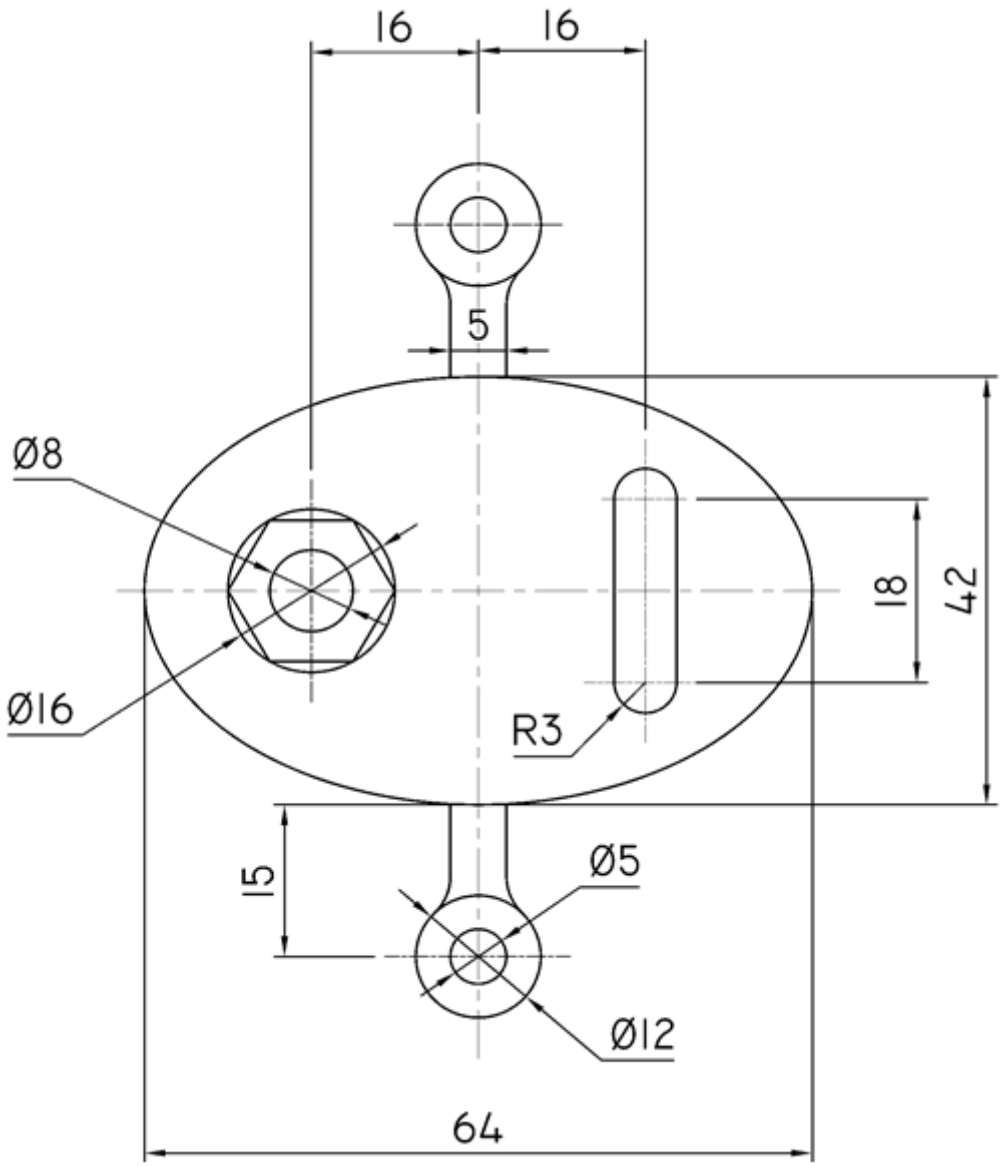

FIGURE 2

3.1 Draw, to scale 2:1, the view of a cover plate. Use the four-centre method to construct the ellipse. Show ALL construction lines. (11)

3.2 Add FOUR dimensions to the drawing. (2)

3.3 Print the following centrally beneath the drawing:

COVER PLATE
SCALE 2:1 (2)

[15]

QUESTION 4: FIRST-ANGLE ORTHOGRAPHIC PROJECTION

FIGURE 3 below shows an isometric view of a casting.

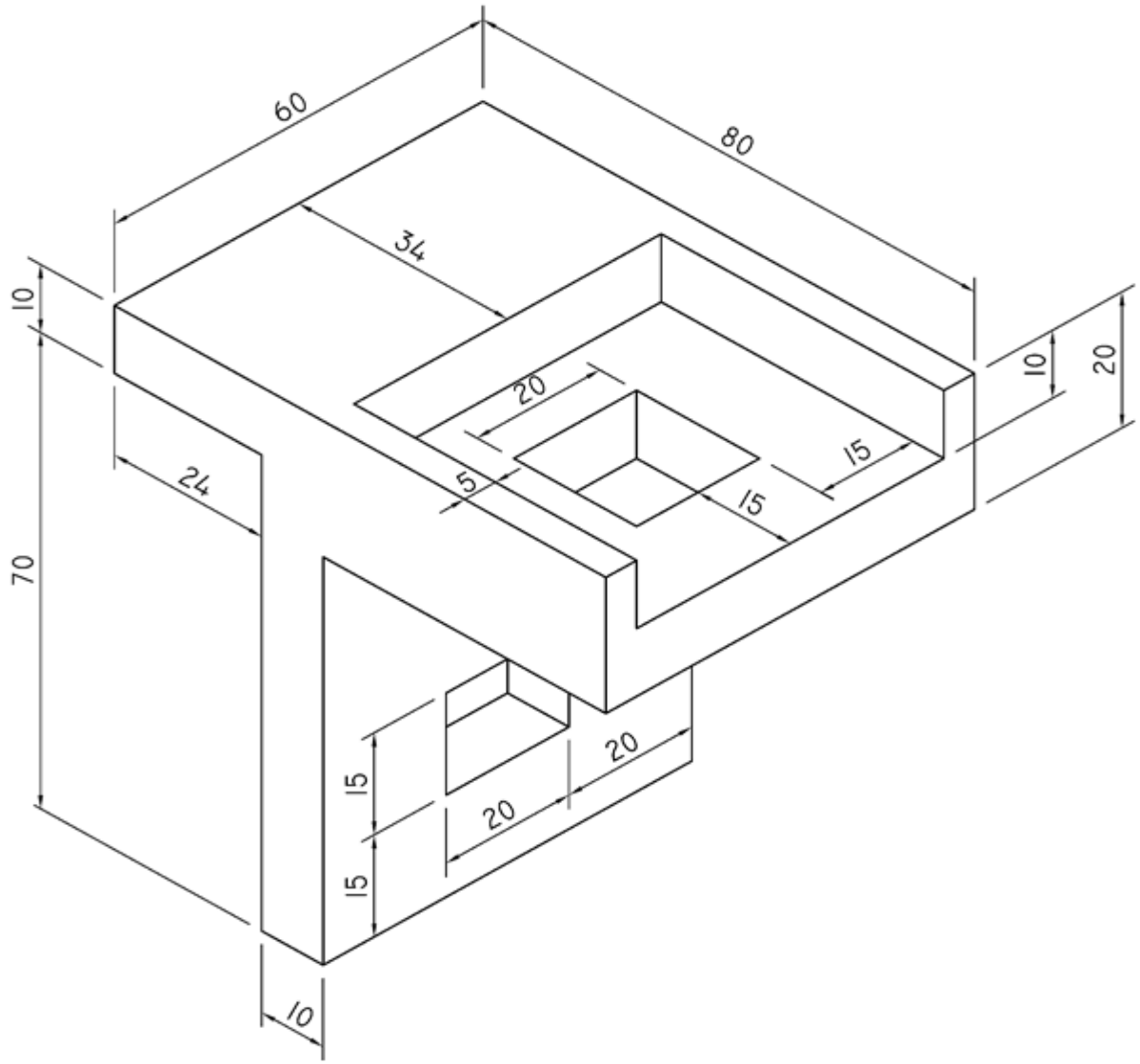

FIGURE 3

Draw, to scale 1:1, the following views of a component in first-angle orthographic projection:

4.1 A front view with all hidden detail shown (4)

4.2 A left view with all hidden detail shown (5)

4.3 A top view with all hidden detail shown (4)

4.4 Draw the symbol for first-angle orthographic projection beneath the layout (1)

4.5 Print the following title and scale centrally beneath the layout:

CASTING
SCALE 1:1 (1)

[15]

Copyright reserved

QUESTION 5: ISOMETRIC DRAWING

FIGURE 4 below shows TWO primary views of a bracket in first-angle orthographic projection.

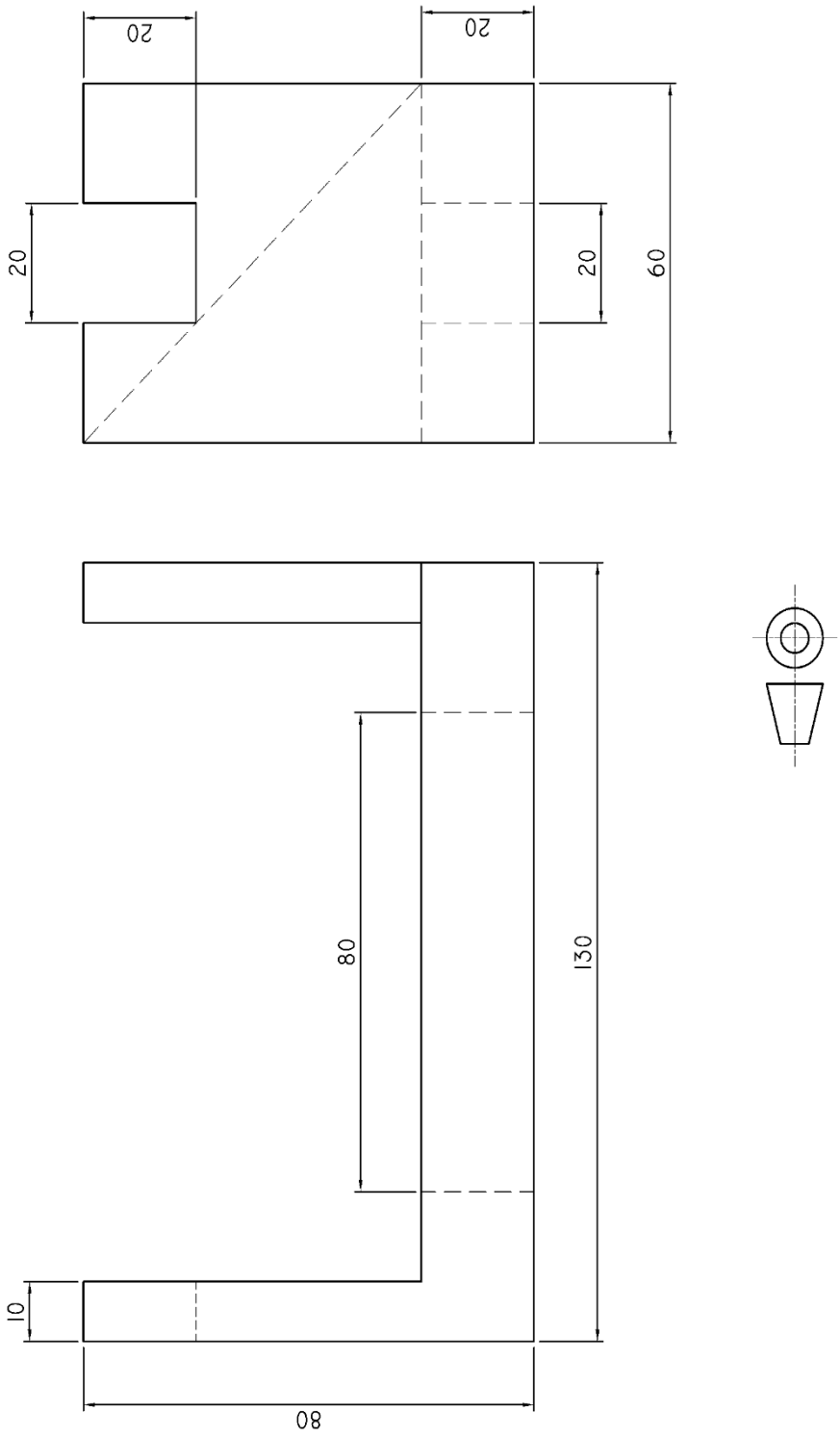

FIGURE 4

Do NOT redraw the views, but draw an isometric view of a bracket. DO NOT show any hidden details. **[18]**

Copyright reserved

QUESTION 6: SECTIONAL DRAWING

FIGURE 5 below shows TWO views of a casting in first-angle orthographic projection.

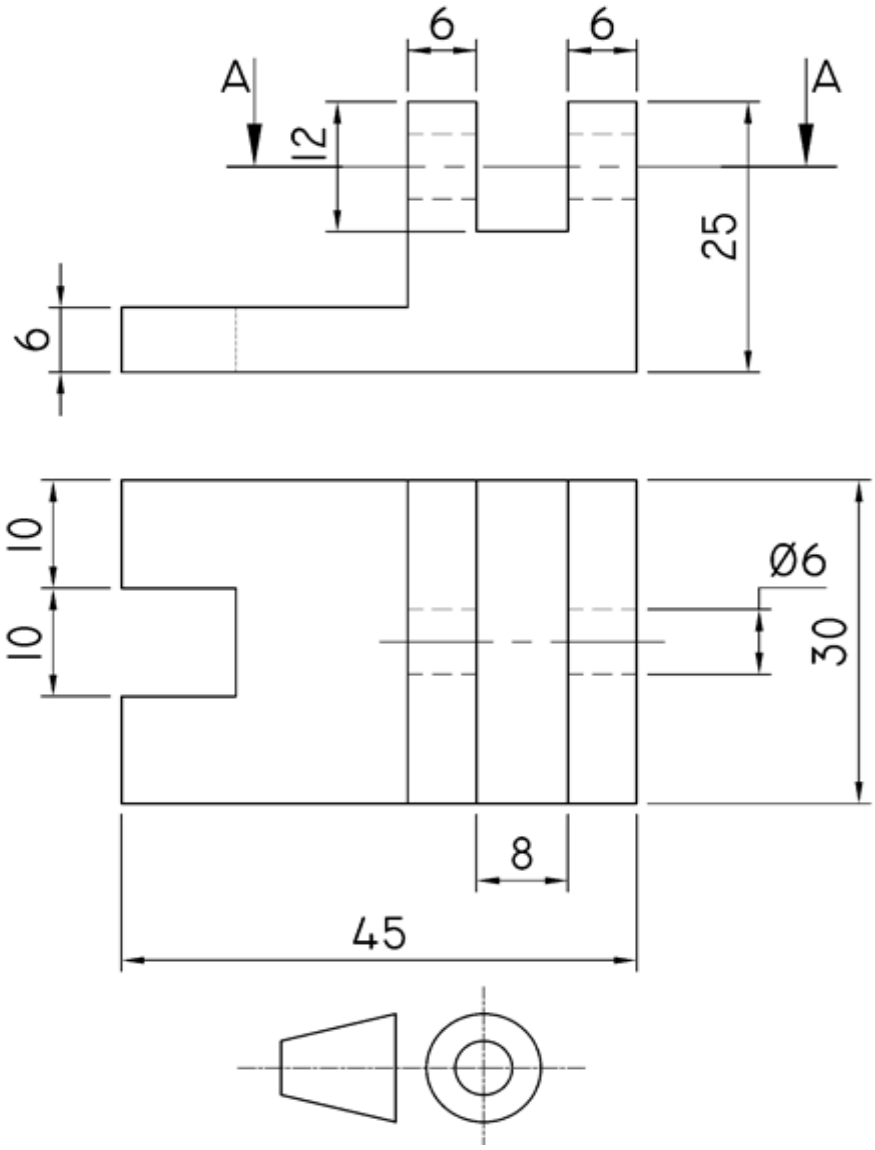

FIGURE 5

Draw, to scale 2:1, the following views of the casting in first-angle orthographic projection:

6.1 A full sectional front view (5)

6.2 A full sectional top view on cutting plane A-A (4)

6.3 An outside left view with all hidden detail shown (6)

6.4 The symbol for first-angle orthographic projection (2)

[17]

QUESTION 7: PRISM AND PYRAMID

FIGURE 6 below shows the front and auxiliary views of a hexagonal prism.

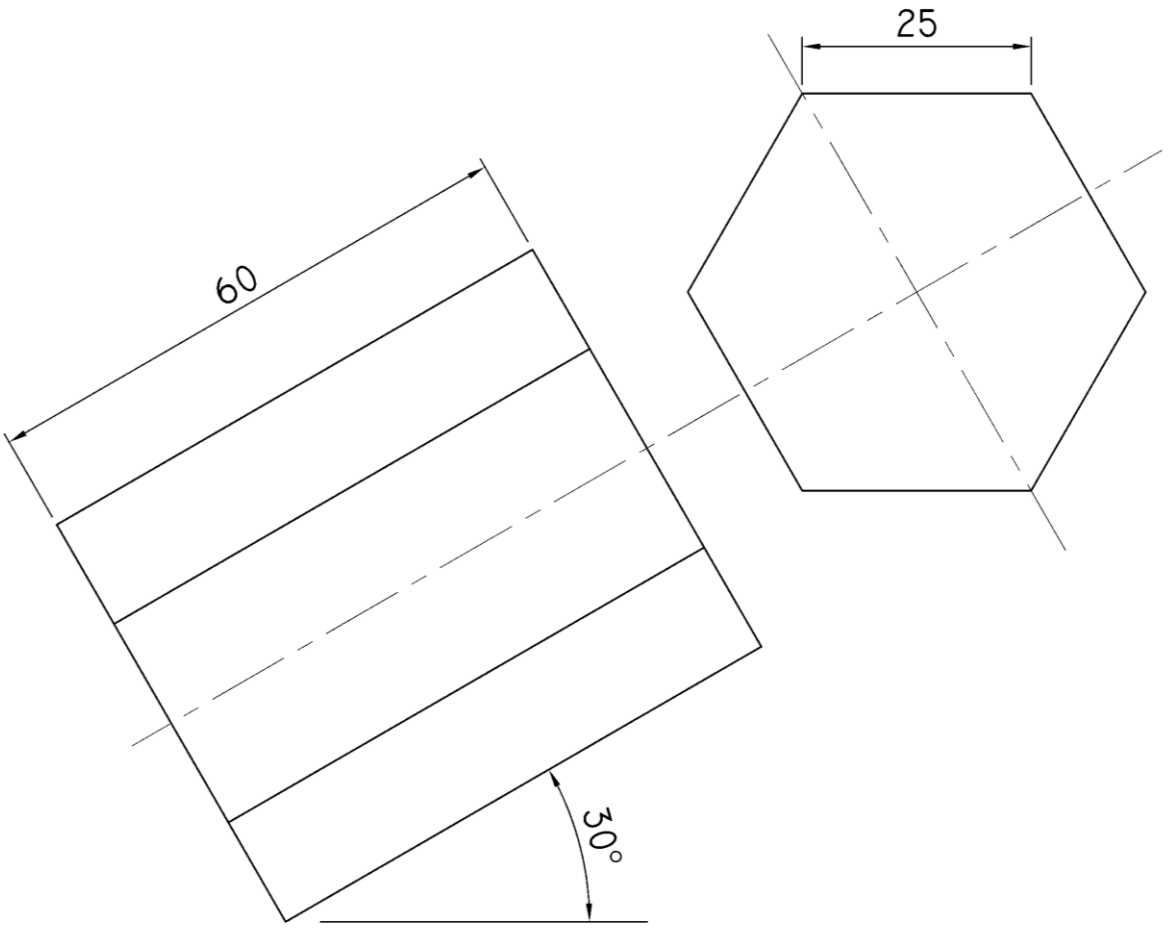

FIGURE 6

Draw, to scale 1:1, the following views of the prism in first-angle orthographic projection:

7.1	The given front and auxiliary views	(2)
7.2	A top view without the hidden details	(5)
7.3	A left view without the hidden details	(5)
		[12]

Marks to be allocated for balance, layout, and neatness of the completed DRAWING SHEET. **[7]**

TOTAL: 100

Copyright reserved