higher education & training

Department:
Higher Education and Training
REPUBLIC OF SOUTH AFRICA

MARKING GUIDELINE

NATIONAL CERTIFICATE

ENGINEERING DRAWING N1

15 November 2022

This marking guideline consists of 13 pages.

Copyright reserved

✓ = 1 mark
√ = ½ mark

QUESTION 1

1.1	Copied ANSWER BLOCK			(1)
1.2	1.2.1	D		
	1.2.2	A		
	1.2.3	C		
	1.2.4	B		
	1.2.5	C		
			(5 × 1)	(5)
				[6]

QUESTION 2: FREEHAND DRAWING

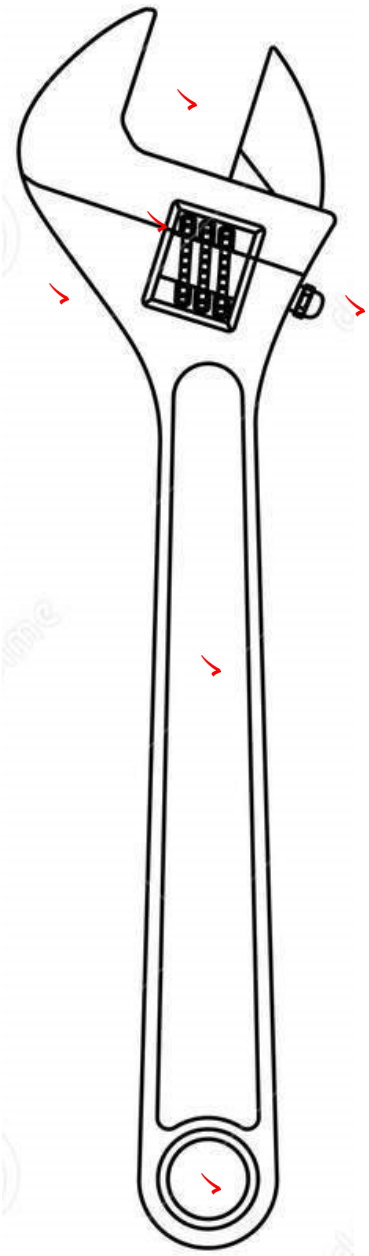

MARKING CRITERIA	
Correctness	6
Line work	2
Proportion	2
TOTAL	**10**

Copyright reserved

QUESTION 3: REPRODUCTION DRAWING

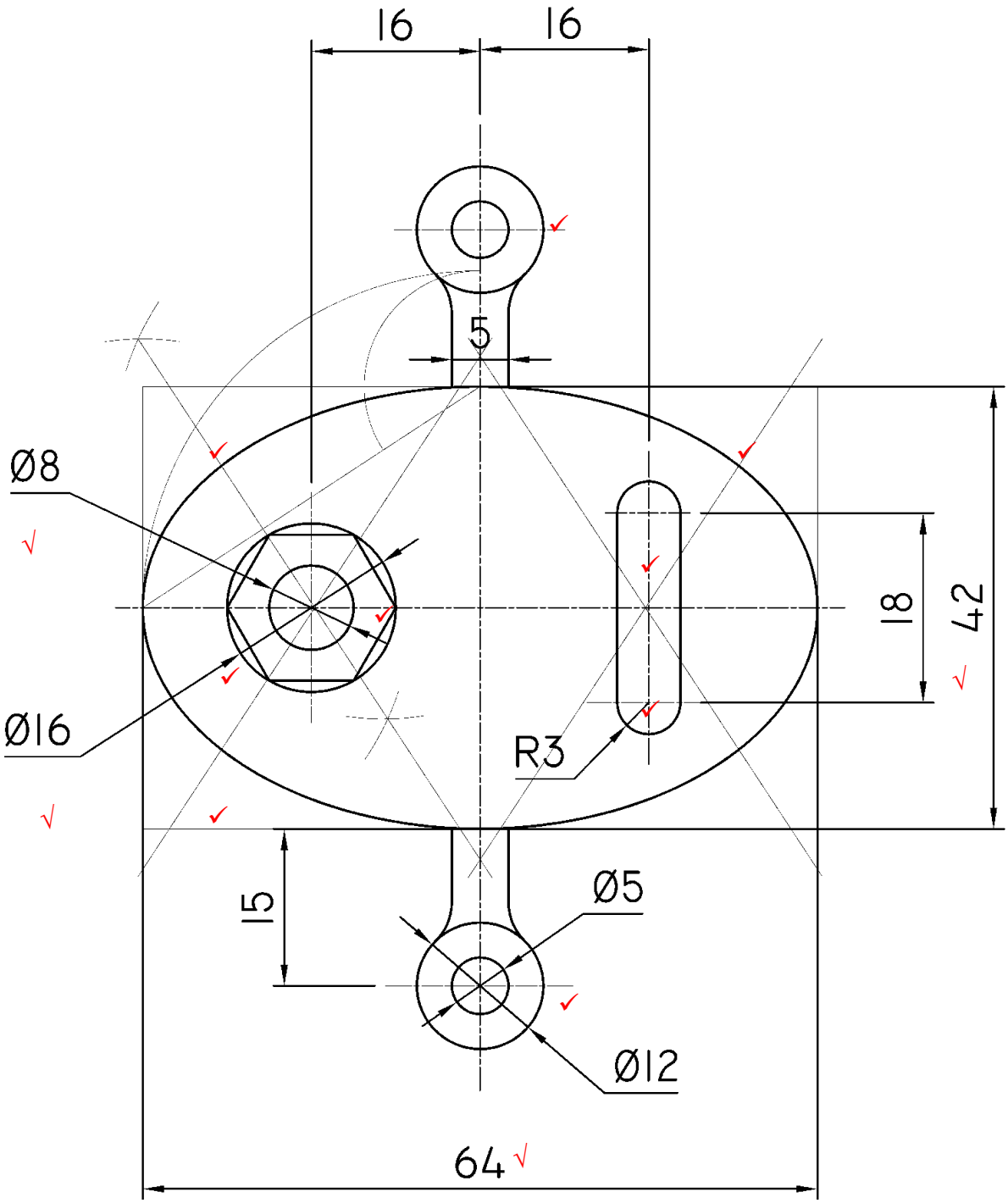

COVERPLATE✓
SCALE 2:1✓

MARKING CRITERIA	
Correctness	9
Line work	1
Accuracy	1
Dimensions	2
Title and scale	2
TOTAL	**15**

1	3	Marks for ellipse + construction lines	3 Marks
2	2	Marks hexagon	2 Marks
3	2	Marks for other circles	2 Marks
4	2	Marks for groove inside ellipse	2 Marks
		TOTAL	**9 Marks**

[15]

QUESTION 4: FIRST-ANGLE ORTHOGRAPHIC PROJECTION

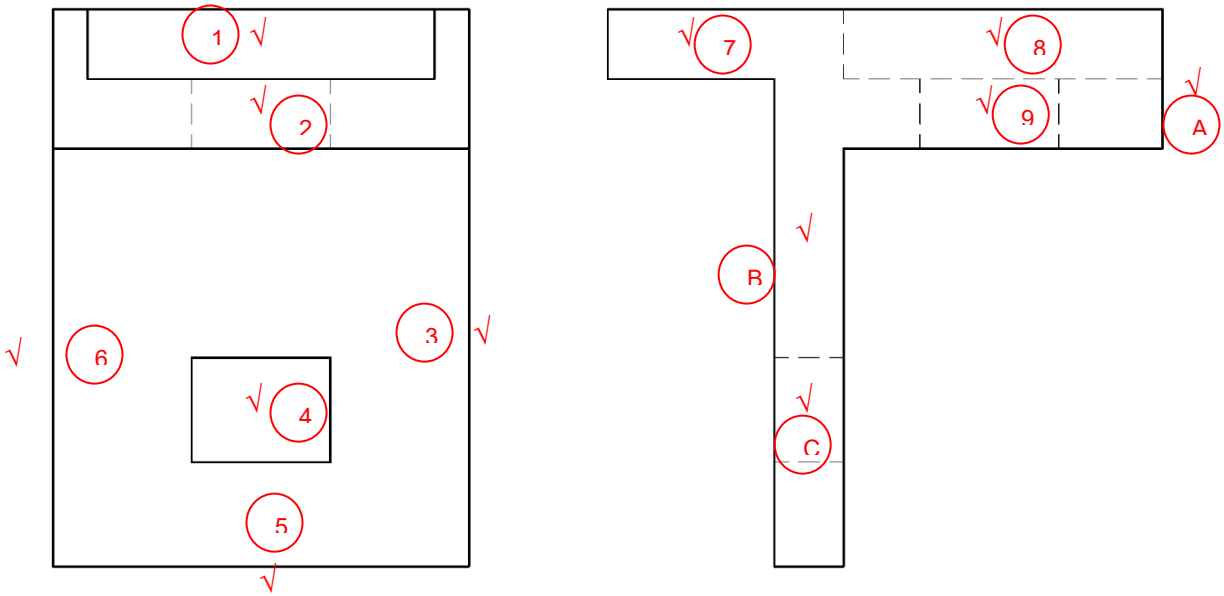

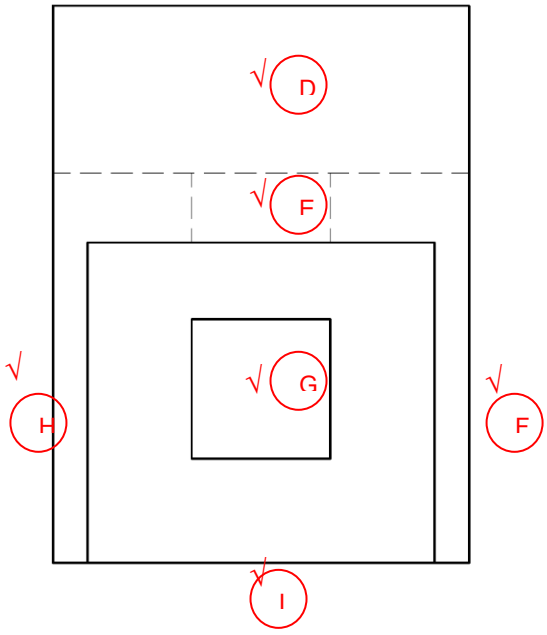

CASTING
SCALE 1:1

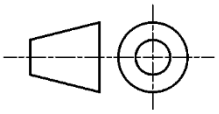

MARKING CRITERIA			
	FRONT	**LEFT**	**TOP**
Correctness	3	3	3
Line work	2		
Accuracy	2		
Title and scale	1		
Symbol	1		
TOTAL	**15**		

Copyright reserved

MARK ALLOCATION FOR CORRECTNESS – QUESTION 4

FV

1	½ Mark top slot	½ Mark
2	½ Mark hidden detail	½ Mark
3	½ Mark right-side line	½ Mark
4	½ Mark rectangular	½ Mark
5	½ Mark bottom line	½ Mark
6	½ Mark left-side line	½ Mark
	TOTAL	**3 Marks**

LV

7	½ Mark top-left side	½ Mark
8	½ Mark hidden detail	½ Mark
9	½ Mark hidden detail	½ Mark
A	½ Mark top-right side	½ Mark
B	½ Mark bottom hidden detail	½ Mark
C	½ Mark bottom part	½ Mark
	TOTAL	**3 Marks**

TV

D	½ Mark top part	½ Mark
E	½ Mark hidden detail	½ Mark
F	½ Mark right-side line	½ Mark
G	½ Mark rectangle	½ Mark
H	½ Mark left-side line	½ Mark
I	½ Mark bottom line	½ Mark
	TOTAL	**3 Marks**

Copyright reserved

QUESTION 5: ISOMETRIC DRAWING

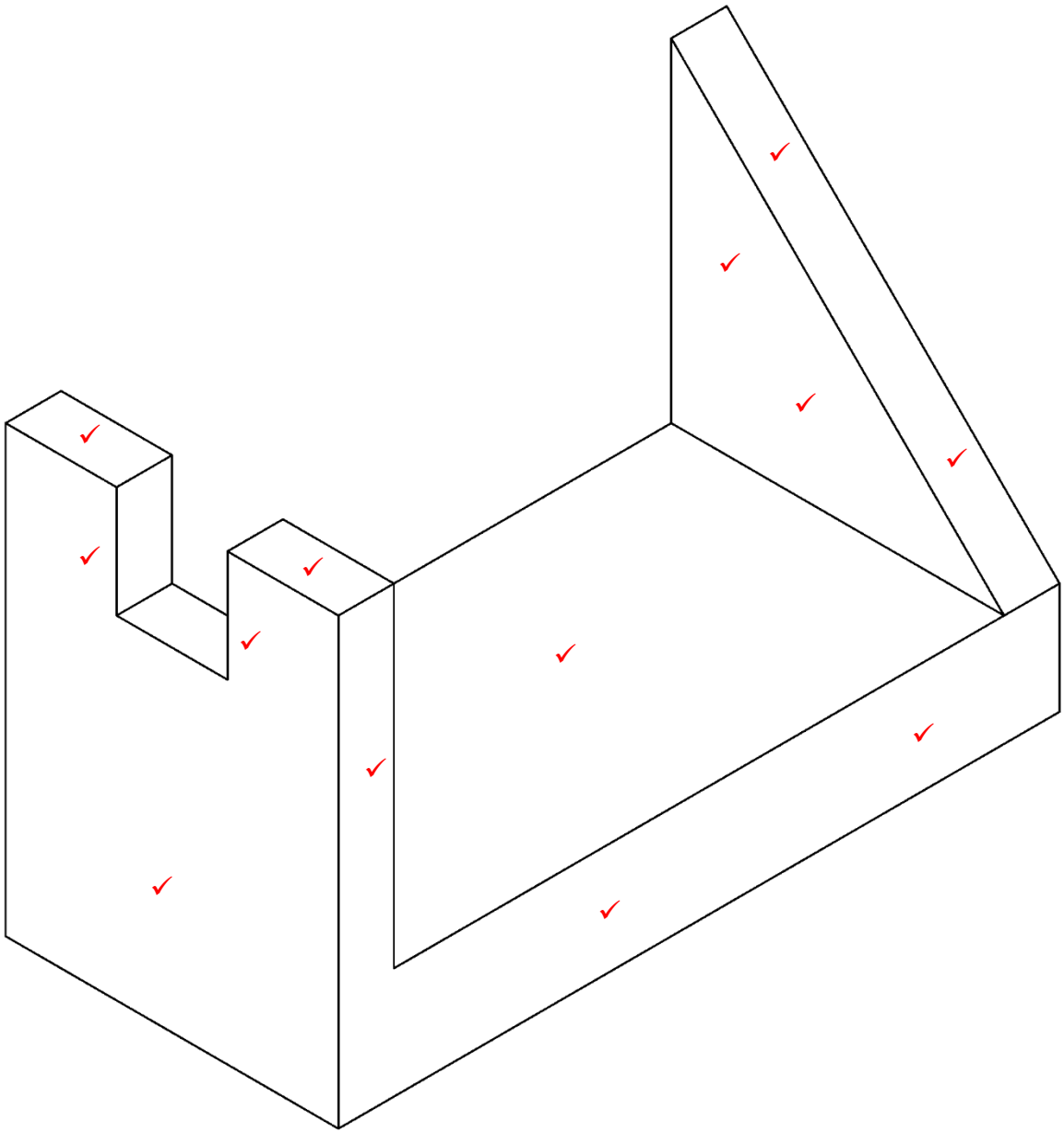

MARKING CRITERIA	
Correctness	13
Lowest point	1
Line work	2
Accuracy	2
TOTAL	**18**

MARK ALLOCATION FOR CORRECTNESS – QUESTION 5

1	5	Marks left view	5 Marks
2	4	Marks front view	4 Marks
3	4	Marks top view	4 Marks
		TOTAL	**13 Marks**

Copyright reserved

QUESTION 6: SECTIONAL DRAWING

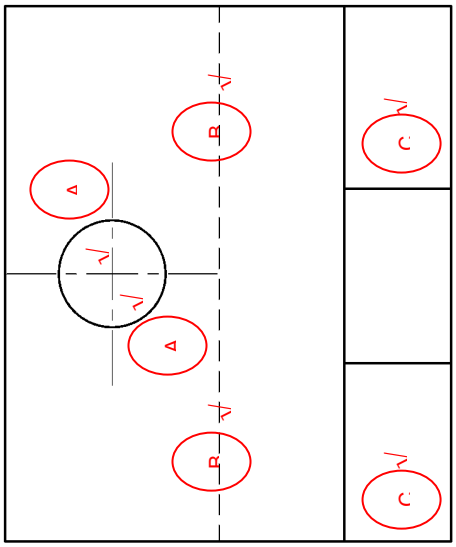

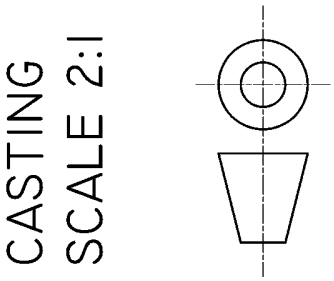

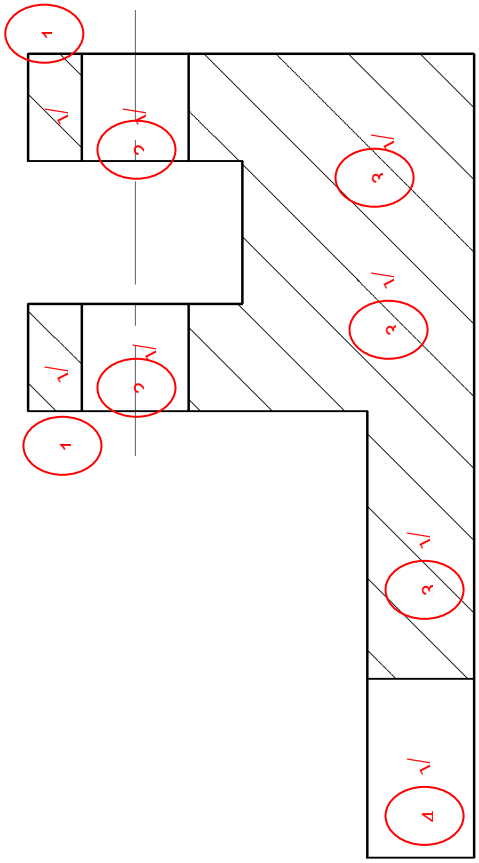

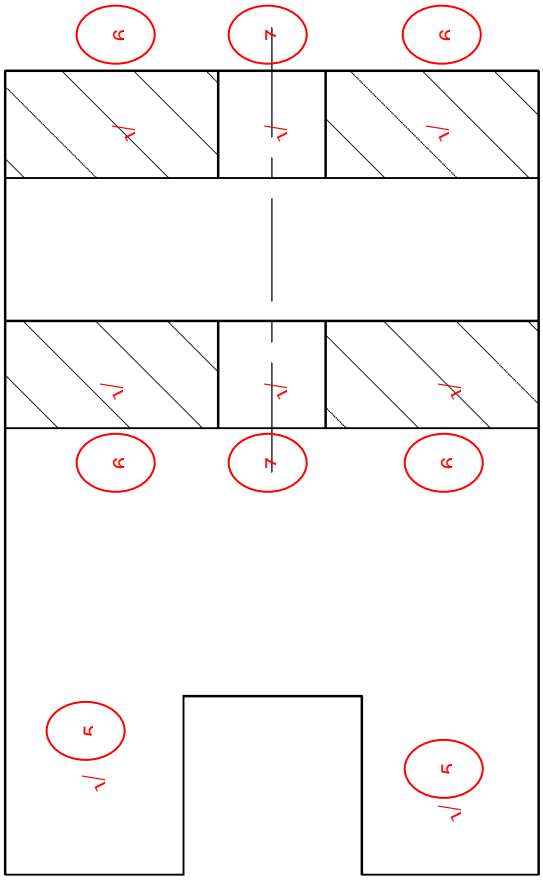

MARKING CRITERIA			
	FRONT	**LEFT**	**TOP**
Correctness	4	3	4
Line work	2		
Accuracy	2		
Symbol	2		
TOTAL	**17**		

MARK ALLOCATION FOR CORRECTNESS – QUESTION 6

FS-FV

1	½ Mark for sectioning (x2)	1 Mark
2	½ Mark for holes (x2)	1 Mark
3	½ Mark for sectioning (x3)	1½ Marks
4	½ Mark for un-sectioned groove	½ Mark
	TOTAL	**4 Marks**

LV

A	½ Mark for holes (x2)	1 Mark
B	½ Mark for hidden detail (x2)	1 Mark
C	½ Mark for bottom part (x2)	1 Mark
	TOTAL	**3 Marks**

FS-TV – A-A

5	½ Mark for un-sectioned part (x2)	1 Mark
6	½ Mark for sectioning (x4)	2 Marks
7	½ Mark for holes (x2)	1 Mark
	TOTAL	**4 Marks**

Copyright reserved

QUESTION 7: PRISM AND PYRAMID

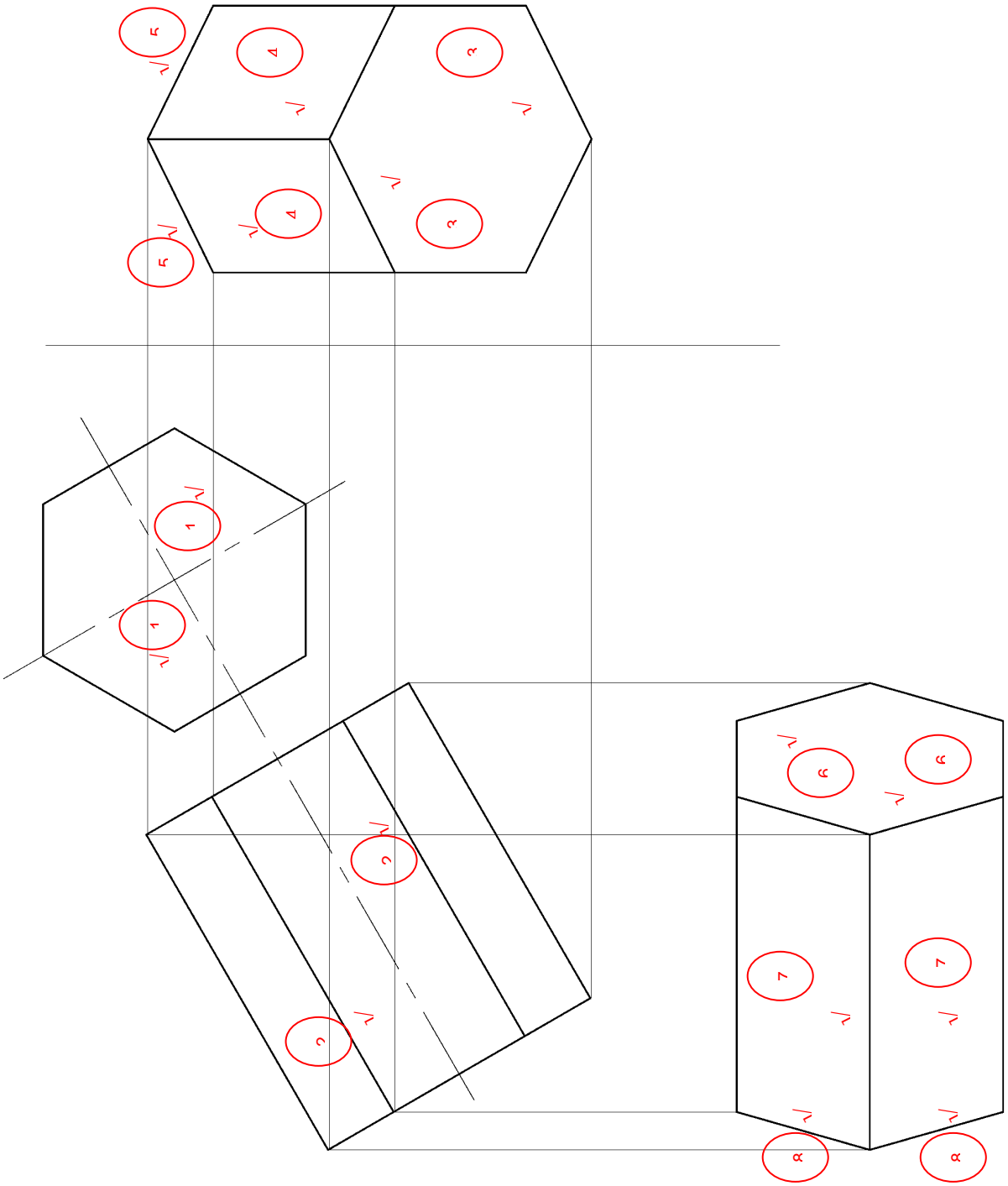

MARKING CRITERIA			
	Front	**Left**	**Top**
Correctness	2	3½	3½
Line work	2		
Accuracy	1		
TOTAL	**12**		

MARK ALLOCATION FOR CORRECTNESS – QUESTION 7

FV & AUX

1	½	Mark for FV (x2)	1 Mark
2	½	Mark for AUX VIEW (x2)	1 Mark
		TOTAL	**2 Marks**

LV

3	½	Mark for BASE (x2)	1 Mark
4	½	Mark for prism lines (x3)	1½ Marks
5	½	Mark for hidden base (x2)	1 Mark
		TOTAL	**3½ Marks**

TV

6	½	Mark for BASE (x2)	1 Mark
7	½	Mark for prism lines (x3)	1½ Marks
8	½	Mark for hidden base (x2)	1 Mark
		TOTAL	**3½ Marks**

Balance, border lines, layout, and neatness of a completed DRAWING SHEET: (7)

MARKING CRITERIA	
Balanced layout	3
Border lines	2
Layout and neatness	2
TOTAL	**7**

TOTAL: 100

Copyright reserved