higher education & training

Department:
Higher Education and Training
REPUBLIC OF SOUTH AFRICA

NATIONAL CERTIFICATE

ENGINEERING DRAWING N1

(8090261)

21 November 2023 (X-paper)
09:00–13:00

REQUIREMENTS: ONE A2 drawing sheet

Drawing instruments may be used.

This question paper consists of 8 pages and 1 answer sheet.

022Q1E2321

Copyright reserved

DEPARTMENT OF HIGHER EDUCATION AND TRAINING
REPUBLIC OF SOUTH AFRICA

NATIONAL CERTIFICATE
ENGINEERING DRAWING N1
TIME: 4 HOURS
MARKS: 100

INSTRUCTIONS AND INFORMATION

1. Answer all the questions.
2. Read all the questions carefully.
3. Number the answers according to the numbering system used in this question paper.
4. Use both sides of the DRAWING SHEET.
5. Draw a 15-mm border on both sides of the DRAWING SHEET.
6. All drawings must be drawn neatly using your own drawing instruments, unless otherwise specified.
7. Only the candidate information on the drawing sheet must be done in ink. All other drawing work must be done in pencil.
8. All drawings must conform to the latest SANS 10111 Codes of Practice.
9. Unspecified radii must be R5.
10. A balanced layout is very important and candidates will be penalised for poor planning.
11. Use only a black or blue pen.
12. Work neatly.

Copyright reserved

QUESTION 1

NOTE: Answer this question on the attached ANSWER SHEET and submit it with DRAWING SHEET.

1.1 Name the TWO set squares used for engineering drawings. (2)

1.2 Give the full drawing terms for the following abbreviations used in engineering drawings:

1.2.1 CPU

1.2.2 RAM

1.2.3 HEX

(3 × 1) (3)
[5]

QUESTION 2

FIGURE 1 below shows a view of a workpiece. Only use a pencil and eraser and draw freehand the view of the workpiece twice the given size.

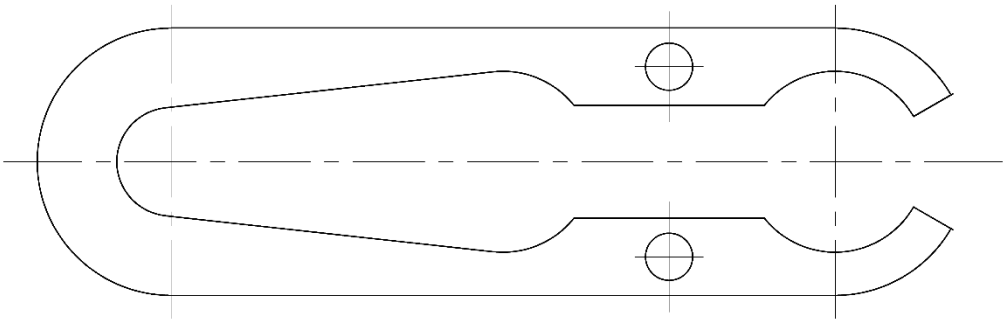

FIGURE 1 **[10]**

QUESTION 3

FIGURE 2 on the next page shows a view of a cover plate.

3.1 Draw to scale 1:1 the view of the cover plate. (12)

3.2 Show all construction lines used in constructing the ellipse. (2)

3.3 Insert any TWO dimensions. (1)
[15]

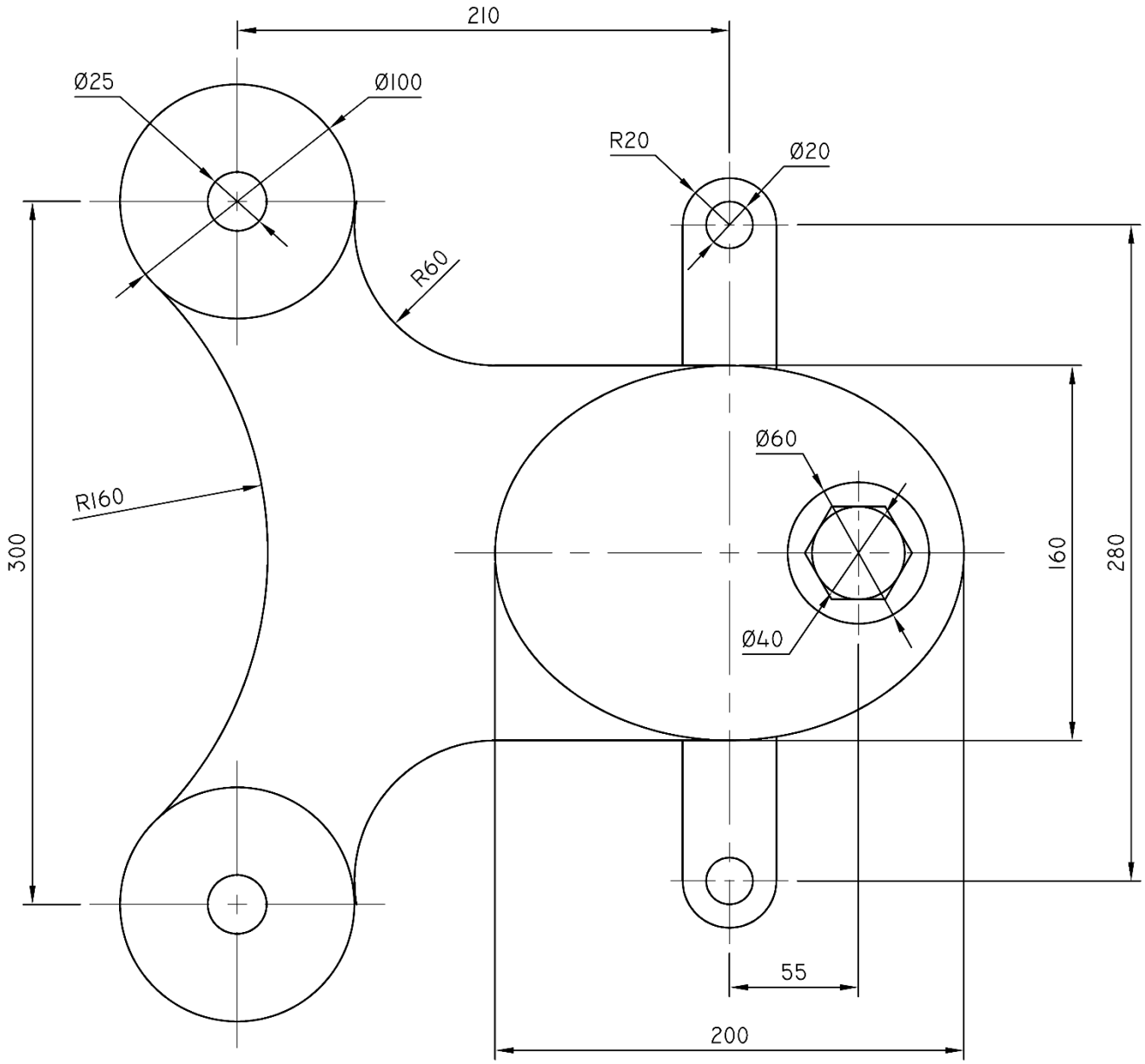

FIGURE 2

QUESTION 4

FIGURE 3 on the next page shows an isometric view of a block.

4.1 Draw to scale 1:1 the following views in first-angle orthographic projection:

4.1.1 Front view

4.1.2 Top view

4.1.3 Left view

(3 × 3) (9)

4.2 Print the following title and scale beneath the layout:

MACHINE PART
SCALE 1:1 (2)

4.3 Draw the symbol for the first-angle orthographic projection beneath the layout. (1)

TWO marks will be given for each view for linework and accuracy. (6)

[18]

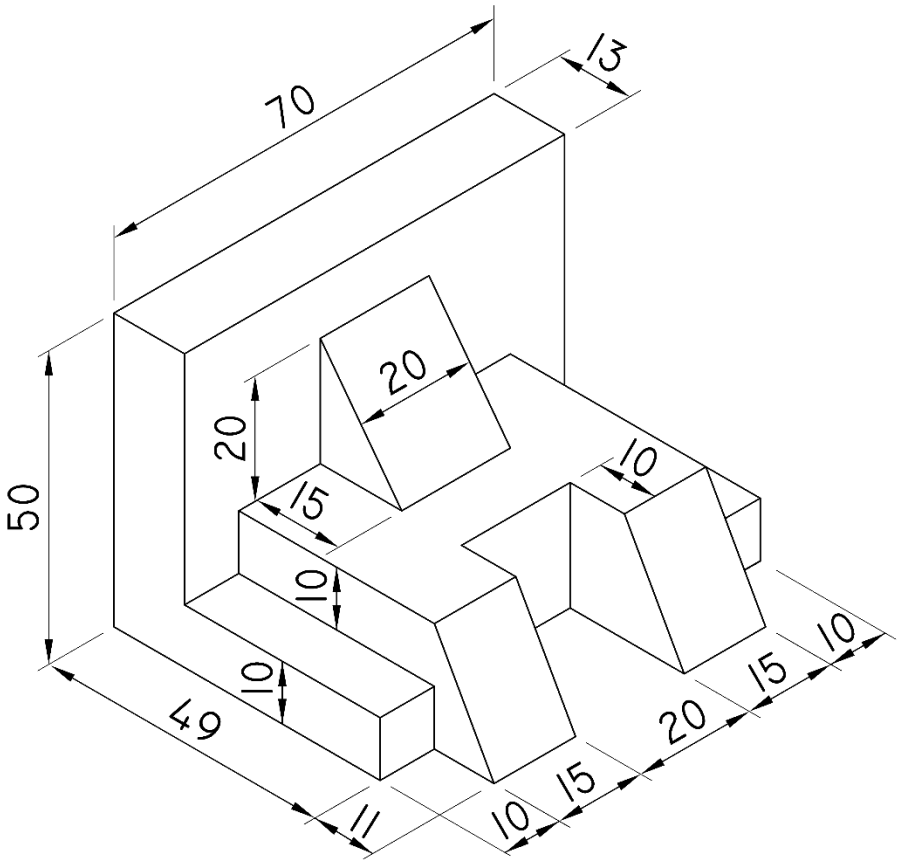

FIGURE 3

QUESTION 5

FIGURE 4 on the next page shows two primary views of a casting drawn in first-angle orthographic projection.

Do not draw the given views, but draw to scale 1:1 an isometric view of the casting.

No hidden details are required. **[18]**

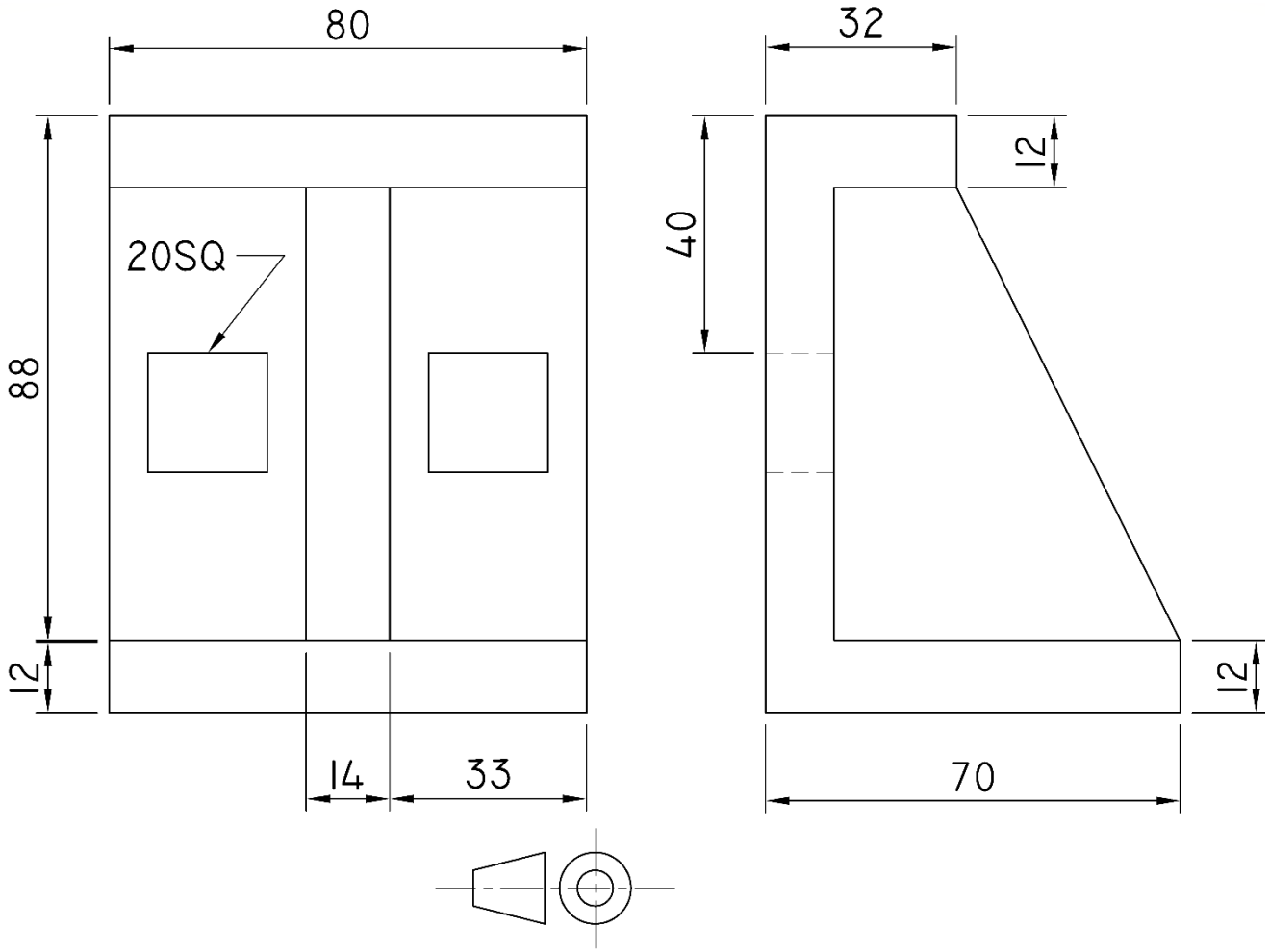

FIGURE 4

QUESTION 6

FIGURE 5 on the next page shows two views of a shaft bracket drawn in first-angle orthographic projection.

Draw in first-angle orthographic projection to scale 1:1 the following views of the shaft bracket:

6.1 A full sectional front view on cutting plane A–A (5)

6.2 A full sectional left view on cutting plane B–B (3)

6.3 Print the following title and scale beneath the layout:

SHAFT BRACKET
SCALE 1:1 (2)

6.4 Draw the symbol for first-angle orthographic projection beneath the layout. (1)

FOUR marks will be given for linework and accuracy, and THREE marks for layout and neatness. (7)

[18]

Copyright reserved

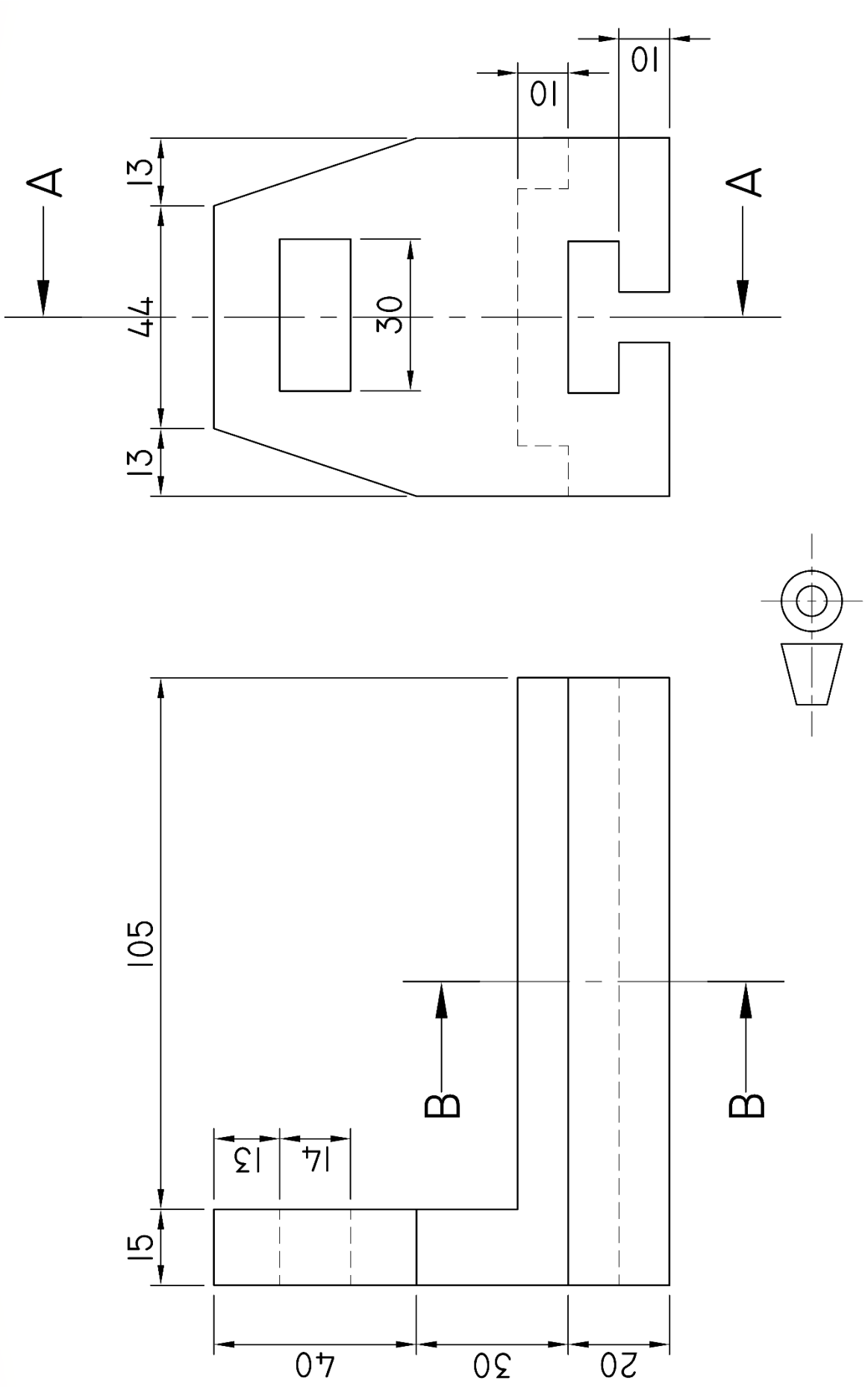

FIGURE 5

Copyright reserved

QUESTION 7

FIGURE 6 below shows a front and auxiliary view of a hexagon pyramid.

Draw in first-angle orthographic projection and to scale 1:1 the following views of the pyramid:

7.1 The given front and auxiliary views

7.2 A top view in the direction 'T'

7.3 A left view in the direction 'L'

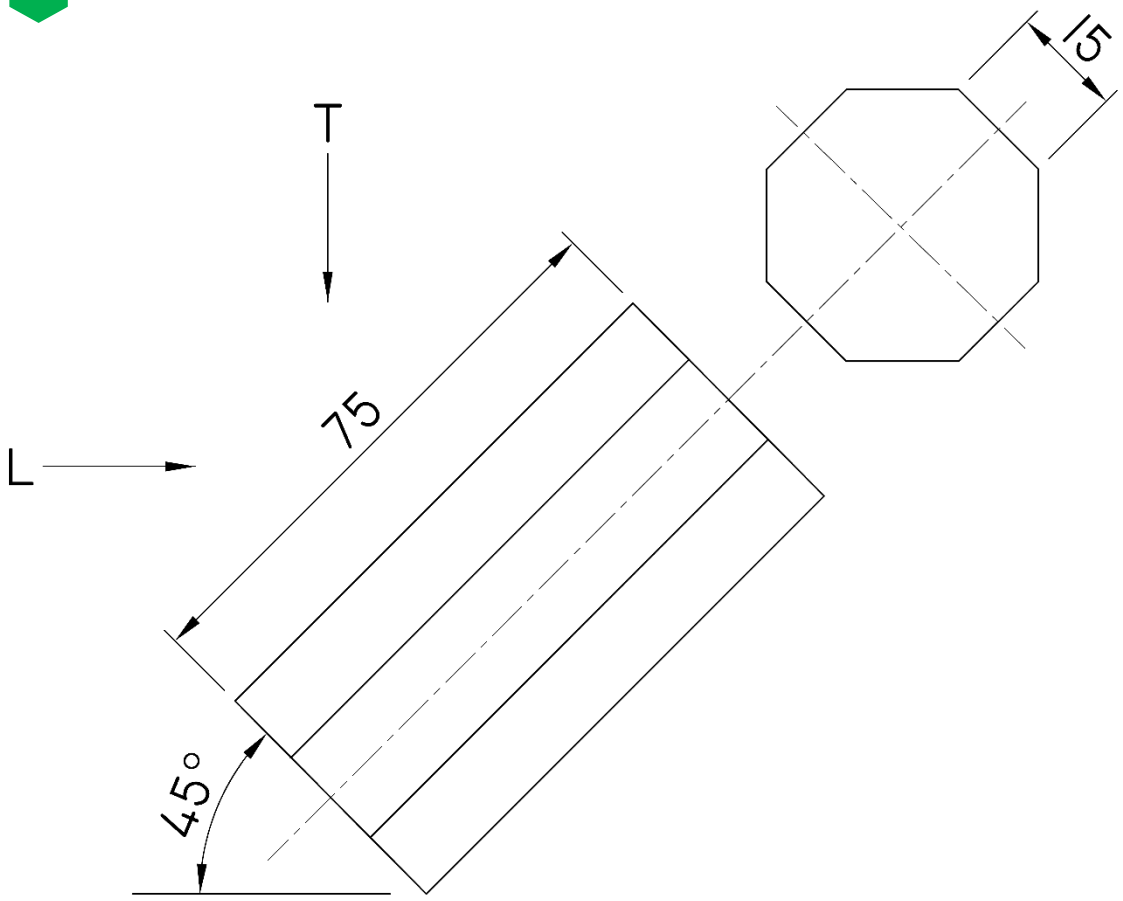

FIGURE 6

[16]

TOTAL: 100

Copyright reserved

ANSWER SHEET **EXAMINATION NUMBER:** | | | | | | | | | | | | | |

QUESTION 1

1.1 _____

_____

_____ (2)

1.2 1.2.1 _____

_____

1.2.2 _____

_____

1.2.3 _____

_____

(3 × 1) (3)

[5]

Copyright reserved